SOFAR

USER MANUAL

ESI-5...12K-T1

Shenzhen SOFARSOLAR Co., Ltd.

Shenzhen SOFARSOLAR Co., Ltd.

11/F, Gaoxinqi Technology Building,

District 67, XingDong Community, XinAn Street,

Bao'An District, Shenzhen, China

Email: service@SOFAR.com

Web: www.sofarsolar.com

EU Representative Information: SofarSolar GmbH.

Address: Kraemerstrasse 20, 72764 Reutlingen, Germany

Tel.: +49 (0)7121 31767-0

E-mail: europe@sofarsolar.com

Document number

Issue 01 | 03.07.2026

English

CONTENT

1	**About this manual**	**1**
1.1	Copyright declaration	1
1.2	Presentation of warnings	2
1.3	Presentation of action instructions	3
1.4	Note	3
2	**Basic safety information**	**4**
2.1	Safety information	4
2.2	Symbols and signs	8
3	**Product features**	**11**
3.1	Product information	11
3.2	Product dimensions	12
3.3	Nameplate on the device	13
3.4	Electrical block diagram	13
3.5	Application scenarios	14
4	**Installation**	**19**
4.1	Installation warning	19
4.2	Energy storage system	19
4.3	Examination before installation	21
4.4	Tools	24
4.5	Installation environment requirements	25
4.6	Inverter installation	27
5	**Electrical connections**	**32**
5.1	Safety warning	32
5.2	Wiring overview	35
5.3	System electrical topology	36

5.4 Smart meter/CT 38
5.5 External electrical connection 42
5.6 Communication interfaces 53

6 Commissioning the inverter 76

6.1 Safety test before commissioning 76
6.2 Double check 76
6.3 Start the inverter 77
6.4 Initial setup 77
6.5 Check or change the GRID code 78
6.6 Check the inverter firmware version 78
6.7 RS485 and logger 79

7 Operation of the device 87

7.1 Buttons and display lights 87
7.2 Standard display 88
7.3 Work modes 89
7.4 Feed-in limitation function 100
7.5 Menu structure 101

8 Fault handling 111

8.1 Troubleshooting 111
8.2 Fault list 113
8.3 Maintenance 126

9 Data sheet 127

1 About this manual

This installation and user manual (hereinafter referred to as the manual) describes the installation, electrical connection, commissioning, maintenance and fault elimination procedures of the following products:
ESI-5K-T1, ESI-6.5K-T1, ESI-8K-T1, ESI-9.9K-T1-A, ESI-10K-T1 and ESI-12K-T1

- Carefully read this manual before use!
- Treat this manual as an integral part of the device.
- Keep this manual in close proximity to the device, including when it is handed over to another user or moved to a different location.

This manual contains important safety information on installation, operation and maintenance of the device.

- Read and observe all safety information provided.

The products, services or features you purchased shall be subject to the company's commercial contracts and terms. All or part of the products and services described in this document may not be within the scope of your purchase. Unless there are any additional terms and conditions in your contract, the company does not make any statement or guarantee on the contents of this document.

1.1 Copyright declaration

The copyright of this manual is owned by SOFAR. It may not be copied – either partially or completely – by companies or individuals (including software etc.) and must not be reproduced or distributed in any form or with any means.
SOFAR reserves the right to final interpretation. This manual may be amended following feedback from users or customers.
Consult our website at https://www.SOFAR.com for the latest version.

1.2 Presentation of warnings

This manual contains information on safe operation and uses symbols to ensure the safety of persons and property as well as the efficient operation of the inverter.

- Read through the following symbol explanations carefully in order to prevent injury and property damage.

1.2.1 Warning symbol

⚠	The general danger symbol warns of the risk of serious injury when used with the signal words CAUTION, WARNING and DANGER.

1.2.2 Signal words

DANGER	Indicates a hazardous situation which, if not avoided, will result in death or serious injury.
WARNING	Indicates a hazardous situation which, if not avoided, could result in death or serious injury.
CAUTION	Indicates a hazardous situation which, if not avoided, could result in minor or moderate injury.
NOTICE	Indicates a danger that will result in damage to or destruction of the inverter.

1.2.3 Sectional warnings

Sectional warnings refer to a complete section and are structured as follows:

⚠ WARNING
Type and source of danger **Consequences of non-observance** ▶ Avoiding the danger

1.2.4 Embedded warnings

Embedded warnings are part of an action sequence and are placed right before the dangerous step.

WARNING Combination of type/source of danger, consequences for non-observance and avoiding the danger.

1.3 Presentation of action instructions

This table shows the sequence of action steps:

Symbol	Function
	This describes an action requirement
1. 2. 3.	This is the sequence of action steps that must be followed step by step
▸	This is a single action step
↳	This describes the result of the action

1.4 Note

Notes are presented in a grey bar.

▶ Provides tips essential to the optimal operation of the product.

2 Basic safety information

- If you have any questions or problems after reading the following information, please contact SOFAR

This chapter details the safety information pertaining to the installation and operation of the device.

2.1 Safety information

Read and understand the instructions within this manual and familiarise yourself with the relevant safety symbols in this chapter before beginning with the installation of the device and eliminating any faults.

Before connecting to the power grid, you must obtain official authorisation from the local power grid operator in accordance with the corresponding national and state requirements. Furthermore, operation may only be carried out by qualified electricians.

Please contact the nearest authorised service centre if any maintenance or repairs are required. Please contact your dealer to obtain information about your nearest authorised service centre. Do NOT carry out repairs on the device yourself; this may lead to injury or property damage.

Before installing the device or carrying out maintenance on it, you must turn the DC switch to **OFF** in order to interrupt the DC voltage of the PV generator. You can also switch off the DC voltage by opening the DC switch in the generation junction box. Not doing this may result in serious injury.

2.1.1 Qualified personnel

Personnel tasked with the operation and maintenance of the device must have the qualifications, competence and experience required to perform the described tasks, while also being capable of fully understanding all instructions contained within the manual. For safety reasons, this inverter may only be installed by a qualified electrician who:

- - has received training on occupational safety as well as the installation and commissioning of electrical systems
- - is familiar with the local laws, standards and regulations of the grid operator.

SOFAR assumes no responsibility for the destruction of property or any injuries to personnel caused by improper usage.

2.1.2 Installation requirements

Please install the inverter according to the information contained in the following section. Mount the inverter to a suitable object with a sufficient load-bearing capacity (e.g. walls, PV frames etc.) and ensure that the inverter is upright. Choose a suitable place for the installation of electrical devices. Ensure that there is sufficient space for an emergency exit which is suitable for maintenance. Ensure sufficient ventilation in order to guarantee air circulation for the cooling of the inverter.

2.1.3 Transport requirements

The factory packaging is specifically designed to prevent transport damage, i.e. from violent shocks, moisture and vibrations. The device must not be installed if it is visibly damaged, however. In this case, notify the responsible transport company immediately.

2.1.4 Labelling on the device

The labels must NOT be concealed by items or foreign objects (rags, boxes, devices etc.); they must be regularly cleaned and kept clearly visible at all times.

2.1.5 Electrical connection warnings

Observe all applicable electrical regulations when working with the solar inverter.

⚠ DANGER

Dangerous DC voltage

- Before establishing the electrical connection, cover the PV panels using opaque material or disconnect the PV panels from the inverter. Solar radiation will cause dangerous voltage generated by the PV panels!

⚠ DANGER

Danger of electric shock!

- All installations and electrical connections must only be carried out by trained electricians!

NOTICE

Authorisation for grid feed-in

- Obtain authorisation from the local power grid operator before connecting the inverter to the public power grid.

- Do not open the inverter or remove any of the labels. Otherwise, SOFAR shall assume no guarantee.

2.1.6 Operation warning

⚠ DANGER

Electric shock

- Contact with the electrical grid or the device's terminals may result in an electric shock or fire!
- Do not touch terminals or conductors which are connected to the electrical grid.
- Follow all instructions and observe all safety documents that refer to the grid connection.

⚠ CAUTION

Burns caused by hot chassis and heat sink

- While the inverter is being operated, several components become very hot.
- Please wear protective gloves!
- Keep children away from the device!

2.1.7 Repair and maintenance

⚠ DANGER

Dangerous voltage!

- Before carrying out any repair work, first turn off the AC circuit breaker between the inverter and power grid and then turn off the DC switch.
- After turning off the AC circuit breaker and the DC switch, wait for at least 15 minutes before starting any maintenance or repair work.

NOTICE

Unauthorised repairs!

- If any repairs required, please contact the local authorised service centre.
- The internal components of the inverter must NOT be opened without the relevant authorisation. Shenzhen SOFAR Co., Ltd. assumes no responsibility for any resulting losses or defects.

2.2 Symbols and signs

CAUTION

Beware of burn hazards due to the hot chassis and heat sink!

- While the inverter is in operation, only touch the display and the buttons, as the housing can become hot.

NOTICE

Implement earthing!

- For reasons of personal safety and in accordance with the requirements of the local power grid operator, we recommend that all PV panel frames and inverters of the PV system are reliably earthed.

WARNING

Damage due to overvoltage

- Ensure that the input voltage does not exceed the maximum permissible voltage. Overvoltage may cause permanent damage to the inverter as well as other damage that is not covered by the warranty!

2.2.1 Symbols on the inverter

Several symbols pertaining to safety can be found on the inverter. Please read and understand the content of these symbols before starting the installation.

Symbol	Description
	Residual voltage is present in the inverter! Before opening the inverter, you should wait for 15 minutes to ensure that the capacitor has been fully discharged.
	Caution! Danger of electric shock.
	Caution! Hot surface.
	The product is compliant with EU guidelines.
	Earthing point.
	Please read the manual before installing the inverter.
IP	Device degree of protection according to EN 60529.
+ −	Positive and negative poles of the DC input voltage.
	Items must be stored in a clean and dry place away from moisture and weather.
	The inverter must always be transported and stored with the arrows pointing upward.
	The cartons are packed with fragile goods and should be handled with care.

Symbol	Description
	A maximum of six layers can be stacked during the stacking process.
	The material can be recycled and reused.
	Do not dispose of the equipment with household garbage at its end of life. Dispose of it according to local laws and regulations or send it back to the manufacturer.

3 Product features

This chapter describes the product features, dimensions and typical application scenarios.

3.1 Product information

The ESI-5...12K-T1 is a grid-coupled PV and energy storage inverter which can also supply energy in stand-alone operation.

The ESI-5...12K-T1 has integrated energy management functions which cover a wide range of application scenarios.

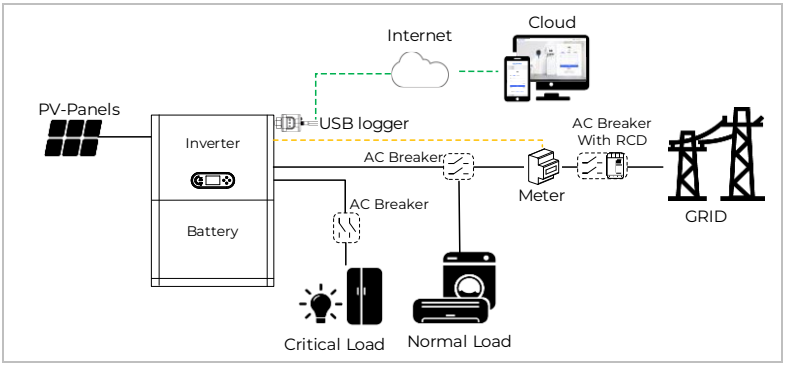

Figure 3-1: ESI-5...12K-T1 inverter typical system diagram

ESI-5...12K-T1 inverters may only be used with photovoltaic modules which do not require one of the poles to be earthed. In normal operation, the operating current must not exceed the limits specified in the technical data.

Selection of the optional inverter parts must be determined by a qualified technician who has thorough knowledge of the installation conditions.

3.2 Product dimensions

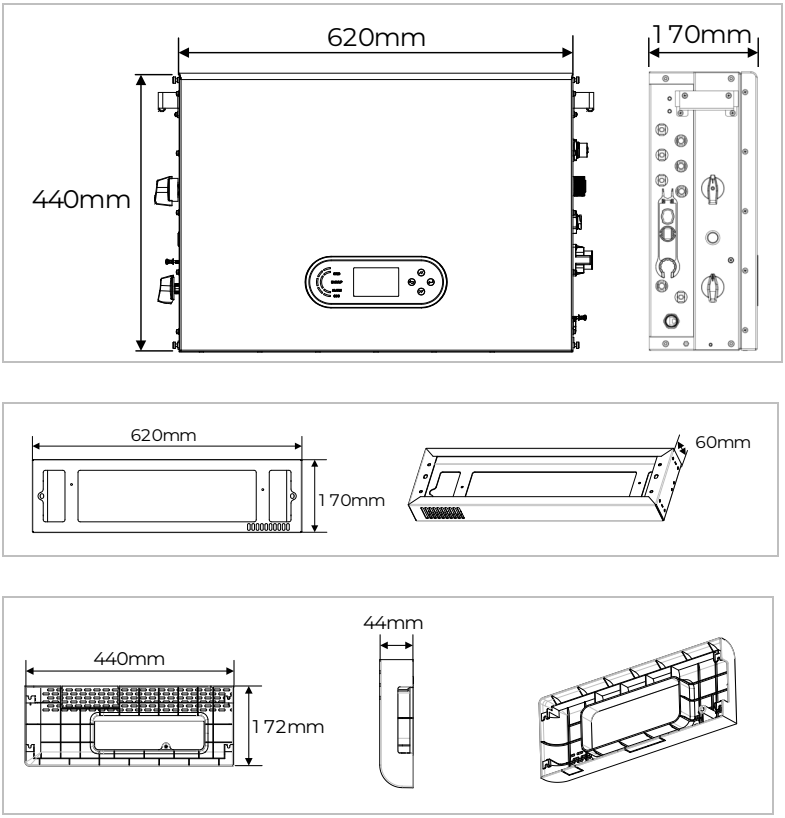

Figure 3-2: Dimensions

3.3 Nameplate on the device

Nameplate must not be covered or removed!

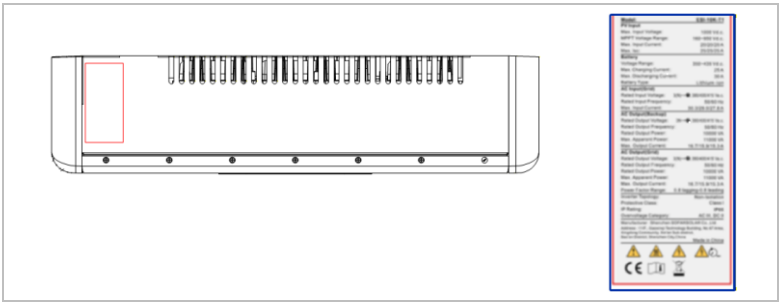

Figure 3-3: ESI-5...12K-T1 appearance and label

3.4 Electrical block diagram

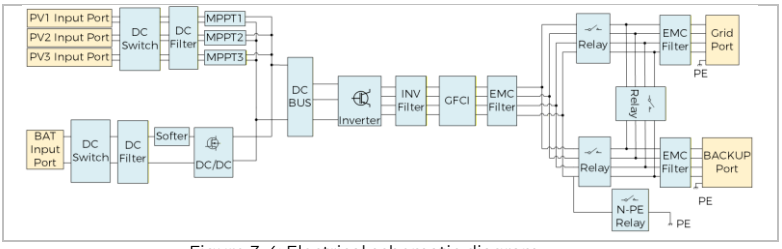

Figure 3-4: Electrical schematic diagram

3.5 Application scenarios

3.5.1 Typical energy storage system

A typical energy storage system with PV panels and battery unit(s) connected to the grid.

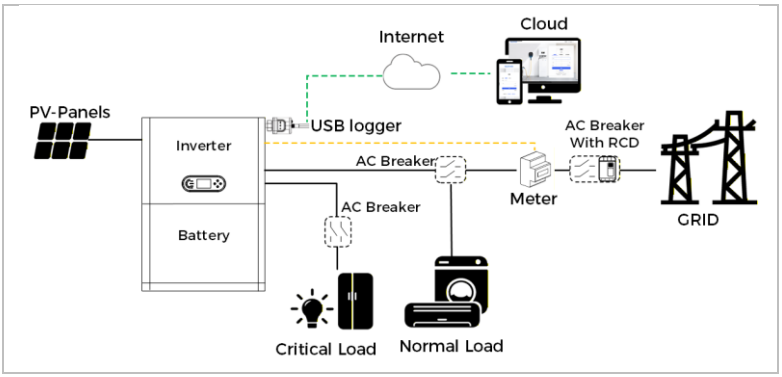

Figure 3-5: Typical energy storage system

3.5.2 System without PV connection

In this configuration, there are no PV panels connected and the battery is charged through the grid connection.

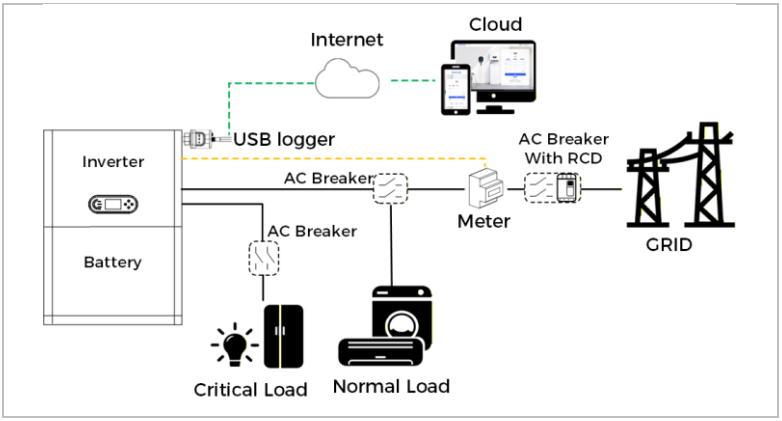

Figure 3-6: System without PV connection

3.5.3 System without battery

In this configuration, the battery unit(s) can be added later.

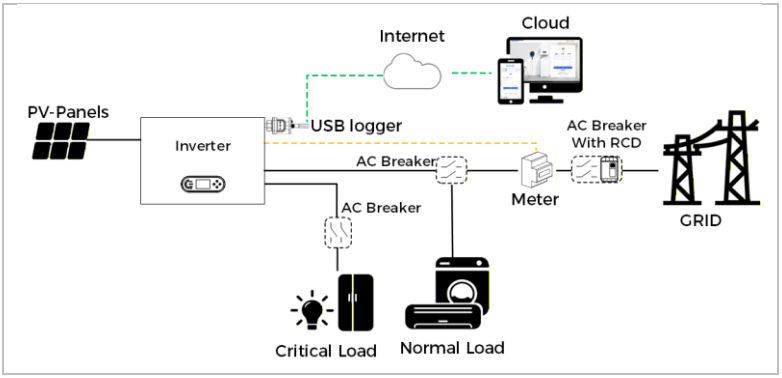

Figure 3-7a: System without battery

3.5.4 Backup mode (off-grid)

When there is no grid connection, the PV panels and the battery will provide electricity to the critical load.

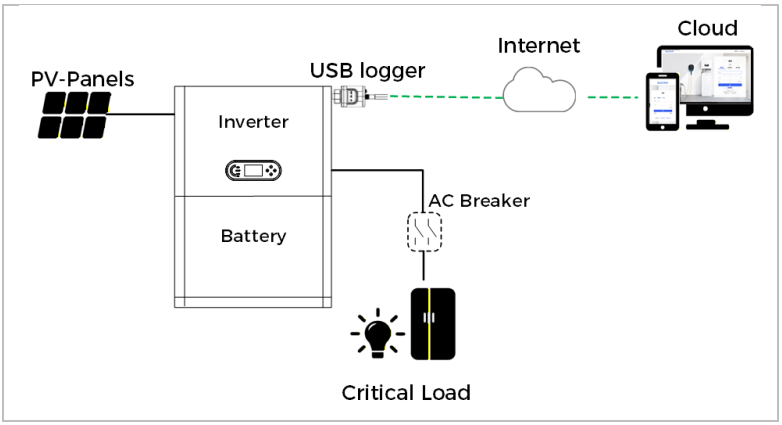

Figure 3-8: Backup mode (off- grid)

3.5.5 System with multiple inverters

In on-grid mode, up to six inverters can operate in parallel;

In off-grid mode, up to three inverters can operate in parallel.

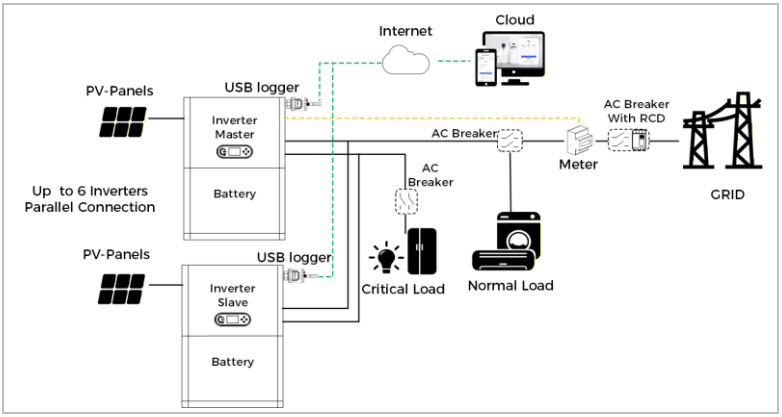

Figure 3-9: System with multiple inverters

- All inverters operating in parallel must share the same model, power rating, and battery configuration.
- The energy meter is connected to the master inverter. Control of all inverters takes place via the link cable.
- For the parallel switching of several devices, we recommend using a joint break switch for the connected loads at the LOAD connection.
- For the parallel switching of several devices, we recommend using a joint break switch for the connected loads at the GRID connection.
- In order to evenly distribute the loads among the inverters, the cable length between each output and the load must be the same.
- If the maximum apparent power of a load is greater than 110% of the inverter's rated output, the device must not be connected via the BACKUP terminal, but rather directly to the grid.

3.5.6 System with solar inverter

In this system configuration, the hybrid system for an already existing PV system is supplemented with a solar inverter of any brand. By installing a second smart meter, PV production can be taken into account and used for charging the battery.

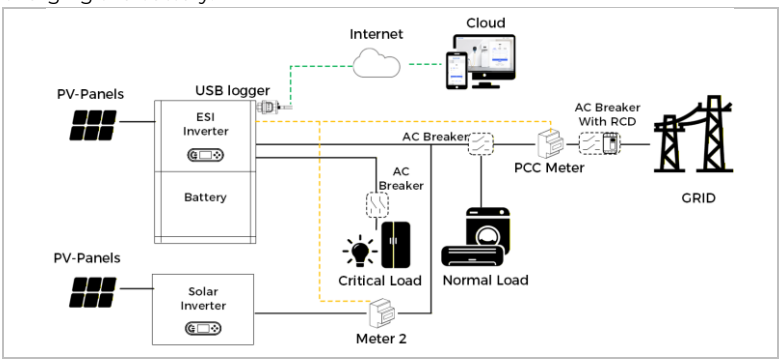

Figure 3-10: AC retrofit system

- The communication address of the PCC meter must be set to 1. If there are multiple meters for solar inverters, their addresses should be set individually from 2 to 4 without duplication.

3.5.7 Unbalanced load

If the BACKUP port is enabled, when working in Off-grid mode, the inverter can work under three-phase unbalanced loads.

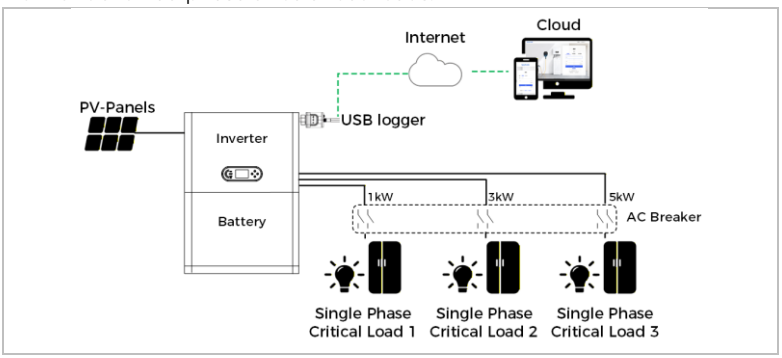

Figure 3-11: Unbalanced load (Off-grid mode)

3.5.8 Unbalanced support

If the "Unbalanced support" is enabled, when working in On-grid mode, the inverter will try to keep the three-phase power flowing to/from the grid balanced.

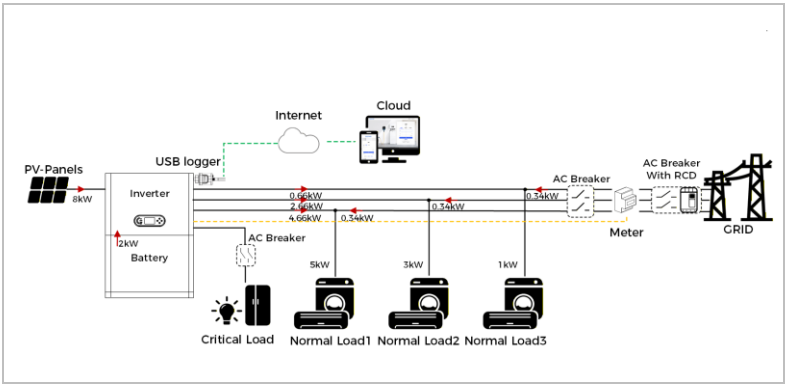

Figure 3-12: Unbalanced support (On-grid mode)

4 Installation

4.1 Installation warning

DANGER

Fire hazard

- Do NOT install the inverter on flammable material.
- Do NOT install the inverter in an area in which flammable or explosive material is stored.

CAUTION

Burn hazard

- Do NOT install the inverter in places where it can be accidentally touched. The housing and heat sink may become very hot while the inverter is in operation.

NOTICE

Weight of the device

- Take into account the weight of the inverter when transporting and moving it.
- Choose a suitable installation location and surface.
- Commission a minimum of two persons with installation of the inverter.

4.2 Energy storage system

The ESI-5...12K-T1 inverter can be stacked with the BTS 5K battery to form an integrated energy storage system. The rated capacity of the BTS 5K battery is 5.12 kWh. Users can flexibly adjust the total system capacity by configuring different quantities of batteries, with support for up to six units (for a maximum of 30.72 kWh).

5kWh
860mm
60mm
708mm
170mm
10kWh
1280mm
60mm
708mm
170mm
15kWh
1700mm
60mm
708mm
170mm

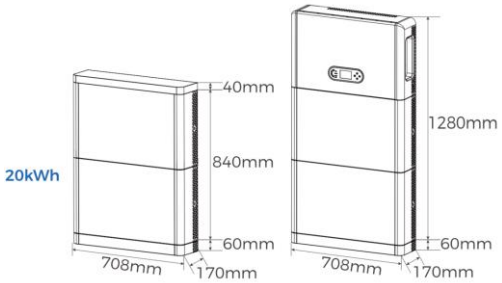
20kWh
40mm
840mm
60mm
708mm
170mm
1280mm
60mm
708mm
170mm

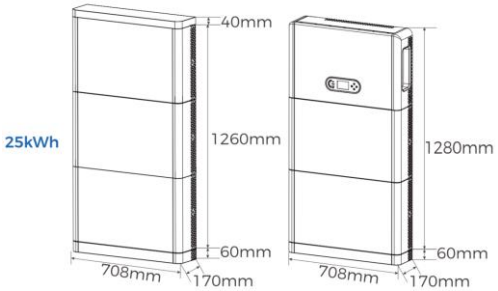
25kWh
40mm
1260mm
60mm
708mm
170mm
1280mm
60mm
708mm
170mm

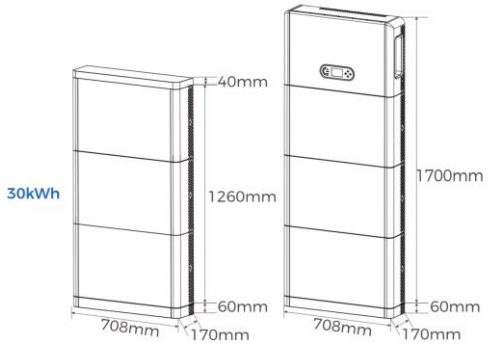

Figure 4-1: Number of battery modules and system capacity

4.3 Examination before installation

4.3.1 Checking the external packaging materials

Packaging materials and components may become damaged during transport. For this reason, the external packaging materials must be examined before the inverter is installed. Check the external packaging material for damage, e.g. holes and cracks. If you discover any damage, do not unpack the inverter and contact the transport company and/or dealer immediately. We recommend that you remove the packaging material within 24 hours of installing the inverter.

4.3.2 Checking the delivery scope

After unpacking the inverter, check that the delivery items are both intact and complete. In the event of any damage or missing components, contact the wholesaler.

- Configuration varies by inverter model; refer to the Quick Installation Guide for the exact delivery scope.

No.	Image	Description	Quantity (pcs.)
01		ESI-5...12K-T1 inverter	1
02		PV– input terminal	3
03		PV+ input terminal	3
04		MC4 connector contact PV–	3
05		MC4 connector contact PV+	3
06		GRID wire end female connector	1
07	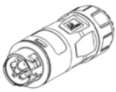	LOAD wire end male connector	1
08		M6*60 expansion screws	4
09		M4*12 screws	6
10		M6*14 screws	4
11		PE wire	1
12		COM connector cable end	1

No.	Image	Description	Quantity (pcs.)
13		Connection plate	2
14	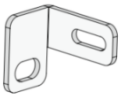	Retainer plate (left)	1
15	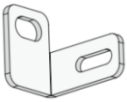	Retainer plate (right)	1
16	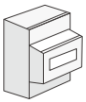	Three-phase smart meter	1
17	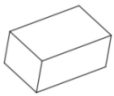	USB acquisition stick	1
18		Decorative cover with screw (left side)	1
19		Decorative cover with screw (right side)	1
20	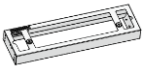	Base	1
21	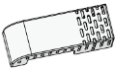	Base decorative cover	2
22		Outgoing inspection report	1
23		Quick installation guide	1
24		core	1

4.4 Tools

Prepare the tools required for the installation and electrical connection.

No.	Tool	Type	Function
01		Hammer drill Recommended drill diameter: 8 mm	Used to drill holes in the wall
02		Screwdriver	Used for wiring
03		Phillips screwdriver	Used to remove and install the screws of the AC terminal
04		Removal tool	Used to remove the PV/battery terminal
05		Wire stripper	Used to strip the wire
06		6 mm Allen key	Used to turn the screw to connect the rear panel to the inverter
07	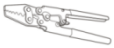	Crimping tool	Used to crimp power cables
08		Multimeter	Used to check earthing
09		Marker	Used for marking
10	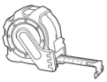	Measuring tape	Used to measure distances
11	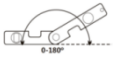	Spirit level	Used to align the wall bracket
12		ESD gloves	For the installer

No.	Tool	Type	Function
13		Safety goggles	For the installer
14		Anti-dust respiratory mask	For the installer

4.5 Installation environment requirements

- Choose a dry, clean and tidy place that is convenient for installation.
- Operating temperature range: –30 to +60 °C (derating above +45 °C).
- Relative humidity: 5 to 95% (non-condensed).
- The inverter must be installed in a well-ventilated place.
- Do not place the inverter close to flammable or explosive materials.
- The AC overvoltage category of the inverter is category III.
- Maximum altitude: 4,000 m (derating above 2,000 m)

Choose a suitable location to mount the inverter (stacking three batteries, for example). Ensure that the following requirements are met:

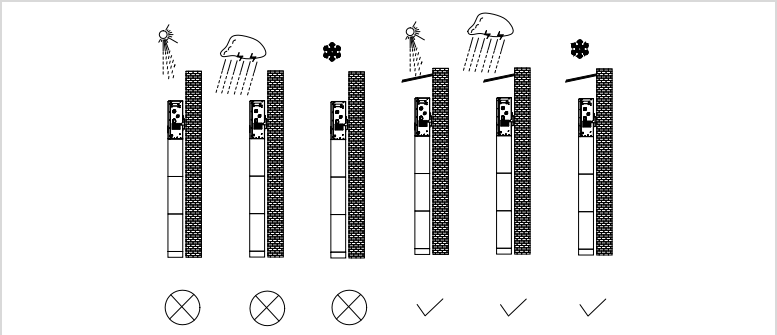

Figure 4-2: Installation position of ESI-5...12K-T1

Minimum distances for individual ESI-5...12K-T1 inverters: 30 cm

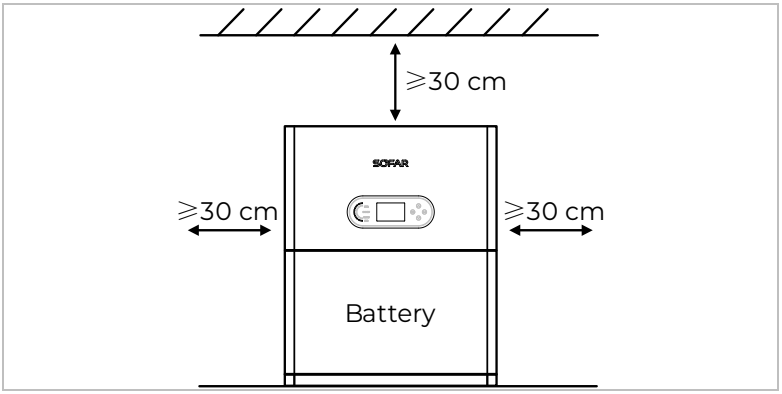

Figure 4-3: Minimum distances for individual inverter

Minimum distances for several ESI-5...12K-T1 inverters:

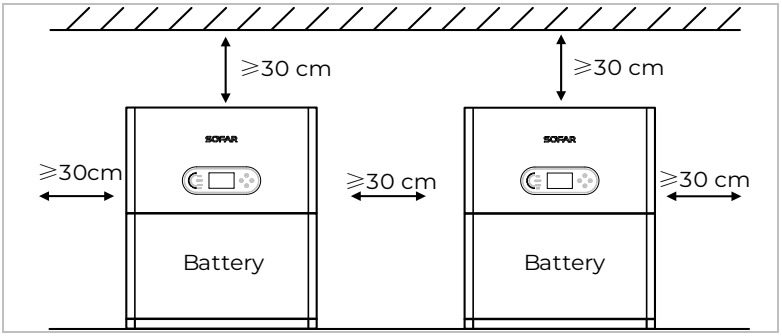

Figure 4-4: Minimum distances for several inverters

4.6 Inverter installation

4.6.1 Unpacking the inverter

1. Open the package and hold the handles above the inverter on both sides with both hands.

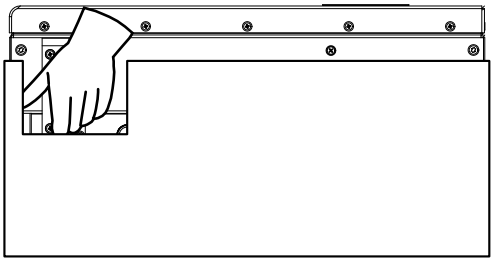

Figure 4-5: Moving the inverter

2. Lift the inverter out of the packaging and move it to its installation position.

NOTICE
Mechanical damage ▶ In order to prevent injuries and damage to the device, ensure that the inverter is kept balanced while it is being moved (it is very heavy). ▶ Do not place the inverter on its connections, as they are not designed to bear its weight. Place the inverter horizontally on the floor. ▶ When you place the inverter on the floor, place foam material or paper underneath it in order to protect its housing.

4.6.2 Ports Introduction

⚠ CAUTION

Damage during transport

- Please check the product packaging and connections carefully prior to installation.

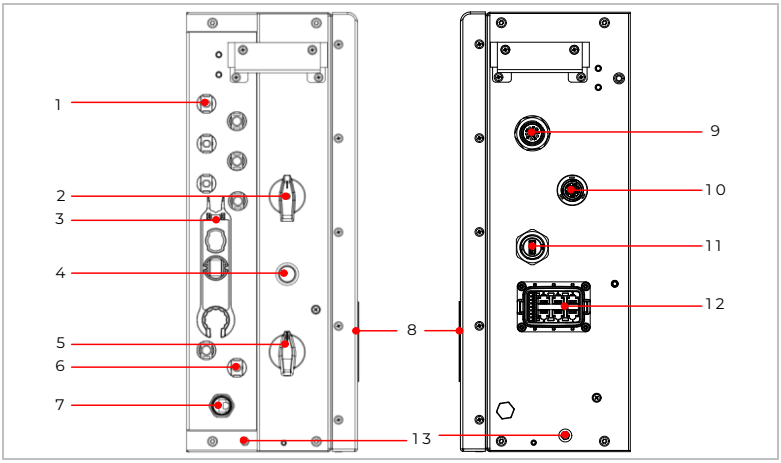

Figure 4-6: ESI-5...12K-T1 inverter overview

1	PV input terminals	**8**	LCD display
2	PV switch	**9**	AC grid connection
3	Terminal remover	**10**	AC backup connection
4	Battery power button	**11**	Wi-Fi/4G
5	BAT switch	**12**	Communication connection
6	BAT input terminals	**13**	PE port
7	BAT communication port		

4.6.3 Inverter installation with battery

ESI series products can be stacked and installed with batteries to form a photovoltaic storage system. The location of the inverters and batteries needs to be evaluated at the beginning of the installation as shown in the following diagram:

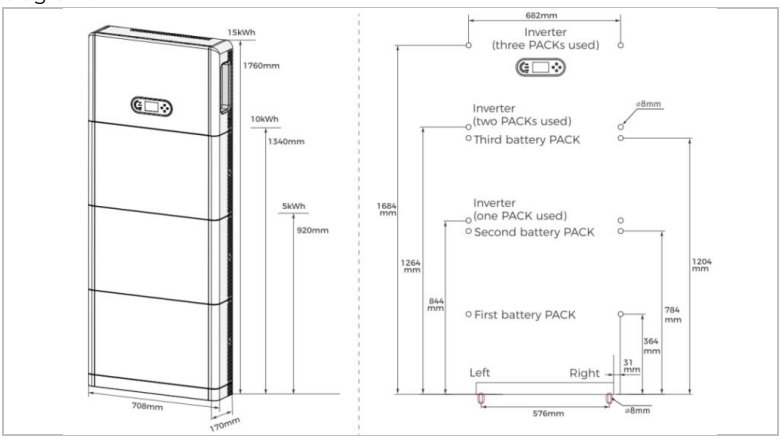

Figure 4-7: Installation dimension diagram

- The installation steps include battery connection. If no battery is required, simply secure the inverter to the base and then install the support rack.

Step 1: Base installation

1. Place the base 10-25mm away from the wall and ensure it is parallel to the wall.
2. Put the spirit level on the battery base to check it. If the level bubble is not centered, adjust the foot pads to level the base.
3. Use a marker to mark the holes for securing the battery module and inverter according to the dimensions shown in the figure below.

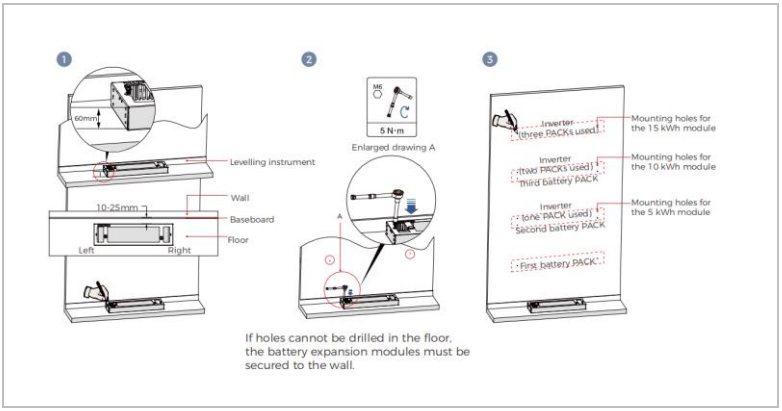

Figure 4-8: Base installation

Step 2: Fixed installation between modules

1. Place the first battery module on the base.
2. Install connectors on both sides and tighten the six screws with a Philips head screwdriver.
3. Install the remaining battery modules and inverter from bottom to top (before installing the next module, ensure that the screws on the side connectors of the previous module are securely installed).

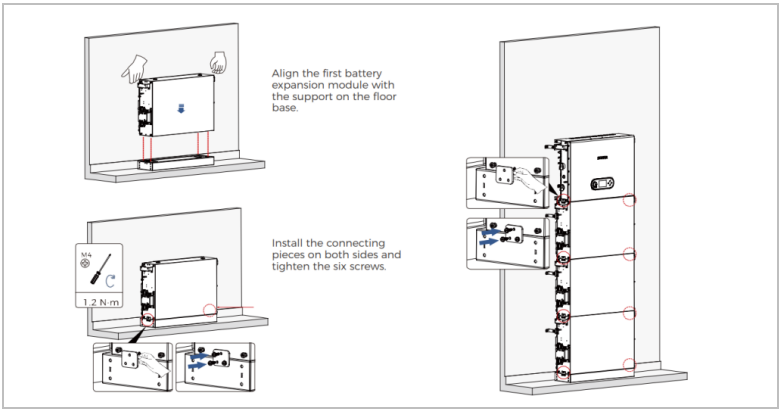

Figure 4-9: Battery module and inverter installation diagram

Step 3: Anti-tip bracket installation

1. Drill holes with a hammer drill (8 mm dia., depth range: 60–65 mm).
2. Reposition and drill the holes if the original one has a large deviation. Install anti-tip bracket B to the wall and fasten expansion bolt.
3. Adjust anti-tip bracket A, making sure the holes are matched up between anti-tip bracket A and anti-tip bracket B.
4. Connect and fix anti-tip bracket A and anti-tip bracket B with M6*16 screws.

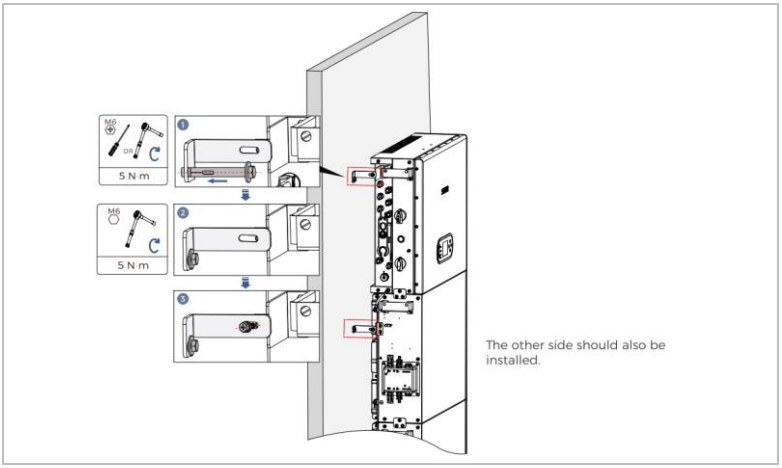

Figure 4-10: Schematic diagram of wall fixing installation

5 Electrical connections

5.1 Safety warning

This topic describes the electrical connections of the ESI-5...12K-T1 inverter. Read this section thoroughly and carefully before connecting the cables.

DANGER

Electrical voltage at the DC connections

- Ensure that the DC switch is OFF before establishing the electrical connection. The reason for this is that an electrical charge remains in the capacitor after the DC switch has been switched off. For this reason, at least 15 minutes must lapse before the capacitor has been electrically discharged.

DANGER

Electrical voltage

- PV modules generate electrical energy when exposed to sunlight, and this may present an electrical shock hazard. For this reason, cover the PV modules with an opaque sheet before connecting to the DC input power cable.

DANGER

Electrical voltage at the DC connections

- Wear rubber gloves and protective clothing (safety goggles and boots) when working on high-voltage/high-current systems such as inverter and battery systems.

NOTICE

Qualification

- The installation and maintenance of the inverter must be carried out by an electrician.
- Consumers must not remove the BACKUP plug from the inverter.

NOTICE

On-grid operation

- After connecting the external terminals, the recommended power-up sequence is: First, turn on the PV switch, followed by the battery switch; then press and hold the battery power button until a battery activation sound is heard; next, connect to the grid; finally, connect the load.
- After connecting the external terminals of the inverter, the recommended de-energizing sequence is: First, shut down the inverter. Then disconnect the grid and the load in sequence. Next, turn off the PV switch. After that, press and hold the battery power button until a shutdown confirmation sound is heard. Finally, turn off the battery switch.

- The open-circuit voltage of the modules connected in series must be lower than or equal to 1,000 V.
- The connected PV modules must be compliant with the IEC 61730 class.

The decisive voltage classification (DVC) is the circuit voltage which constantly occurs between two arbitrary live parts during proper use in a worst-case scenario:

DVC	Operating voltage limit (V)		
	AC voltage (RMS)	AC voltage (PK)	DC voltage (AVG)
A	25 (16)	35.4 (22.6)	60 (35)
B	50 (33)	71 (46.7)	120 (70)
C	1,000	4,500	1,500

▶ The values in brackets apply when the inverter is installed in a humid environment.

Interface	DVC
PV input connection	DVCC
GRID connection	DVCC
BAT connection	DVCC
BACKUP connection	DVCC
Wi-Fi/4G interface	DVCA
COM interface	DVCA

5.2 Wiring overview

Component	Description		Recommended cable type
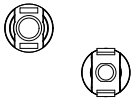	BAT+ : Connect the positive cable of the lithium battery		Outdoor multicore copper cable (4 to 6 mm²)
	BAT– : Connect the negative cable of the lithium battery		
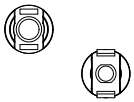	PV+ : Connect the positive cable of the PV array		PV cable (4 to 6 mm²)
	PV– : Connect the negative cable of the PV array		
Backup	Connection method: Male and female terminals are inserted into each other.	L1	Outdoor multicore copper cable 6 to 10 mm²
		L2	
		L3	
		N	
		PE	
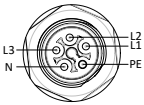 **Grid**	Connection method: Male and female terminals are inserted into each other.	L1	Outdoor multicore copper cable 6 to 10 mm²
		L2	
		L3	
		N	
		PE	

- Selection of the cable cross-section must take into account the length of the cable used and the circuit breaker according to the national standard.

5.3 System electrical topology

The GRID and BACKUP inverters are wired with different N and PE wires depending on the regulatory requirements in different regions.

DANGER

Install residual current device (RCD) ahead of the load

- The RCD is necessary for a critical load, but optional for a normal load.
- In off-grid mode, the BACKUP switch is unprotected and load leakage could lead to a shock hazard.
- The entry master switch installed in the building must have earth leakage protection, and its rated earth leakage action current must be greater than the number of inverters multiplied by 100 mA (suggested value).

System 1: Internal relay controls N-PE earthing

- Ensure the PE conductor is properly and securely connected. Otherwise, the inverter may function abnormally in off-grid mode.
- The diagram below illustrates the electrical system topology applicable to most countries, with the exception of regions like Australia and New Zealand:

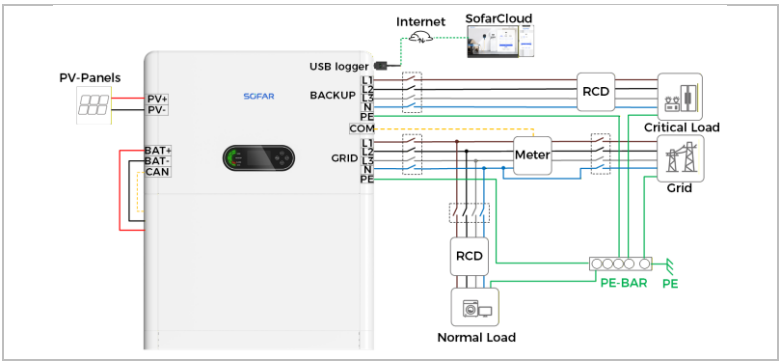

Figure 5-1: System electrical topology (for most countries)

DANGER

Ensure that the output is earthed

- In system 1, the PE line of the inverter's GRID port and BACKUP port must be earthed through the PE bar, as otherwise there may be a risk of leakage.

System 2: N and PE wires are connected together in switchboard

- According to the **Australian safety regulations**, the neutral cables on the grid-connected side and BACKUP side must be connected together. Otherwise, the BACKUP cannot be used.
- In system 2, the N-PE relay is disabled by default. Check the settings: Advanced Settings-> Input 0715-> NeutralPointGrounding-> **Disable**.
- The diagram below illustrates the electrical system topology for regions such as Australia and New Zealand:

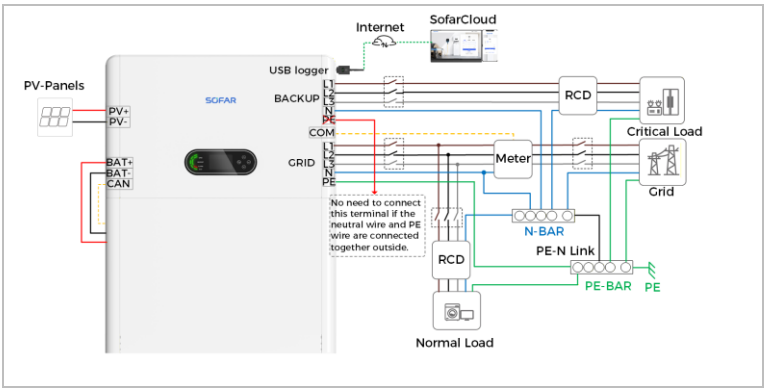

Figure 5-2: System electrical topology (for Australia and New Zealand)

5.4 Smart meter/CT

Different system configurations are possible depending on the user's requirements, existing electrical infrastructure and local regulations. The distribution box must be configured to comply with the grid operator's requirements.

The inverter has an integrated AC relay for disconnecting all phases and neutral from the grid in case of a grid fault or grid outage.

The inverter's power generation and feed-in limiting functions require the use of an external direct-connected meter to obtain grid information.

There are three system configurations:

- System A: measurement of energy with directly connected smart meter – Default configuration (default)
- System B: direct measurement of energy with CTs (3,000:1)
- System C: measurement of energy with energy meter + CTs

- The secondary side current of system B is less than 100 mA. The standard lead length for a CT is 5 m, with a maximum of 50 m. Longer leads require an intelligent smart meter (excessive length will result in poor accuracy).

5.4.1 System A: measurement with directly connected meter (default)

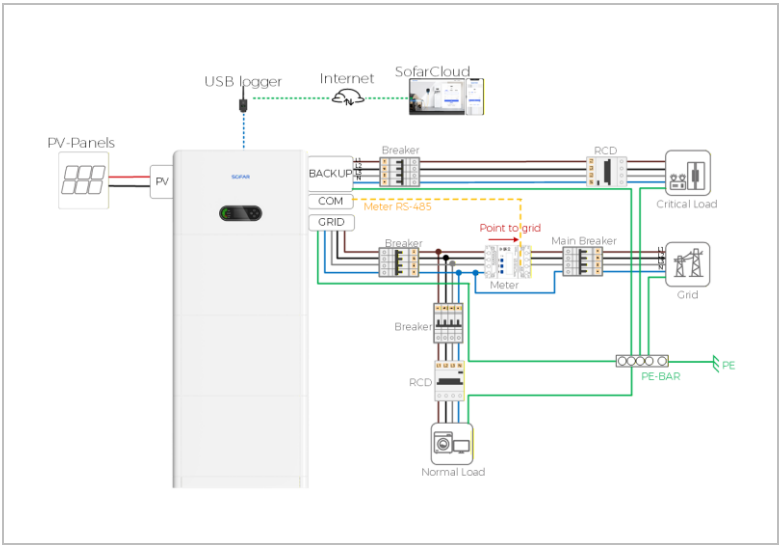

Figure 5-3: Electrical connections for most countries (system A: meter)

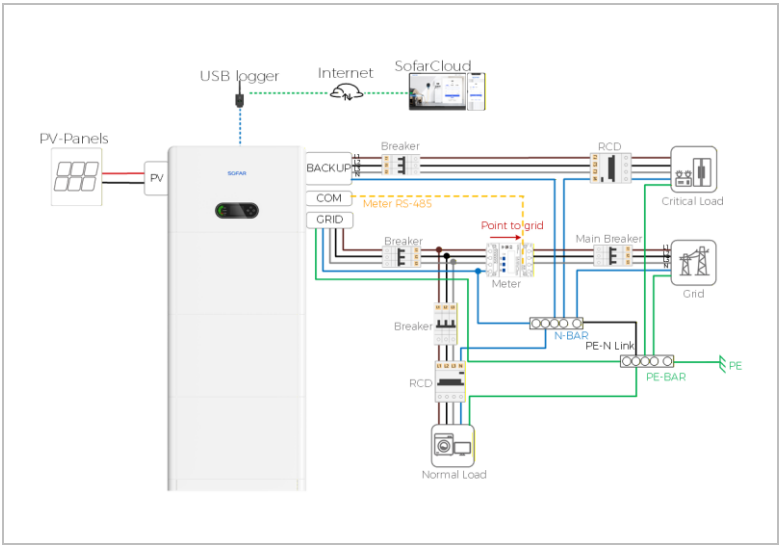

Figure 5-4: Electrical connections for Australia and New Zealand (system A: meter)

5.4.2 System B: direct measurement of energy with CTs

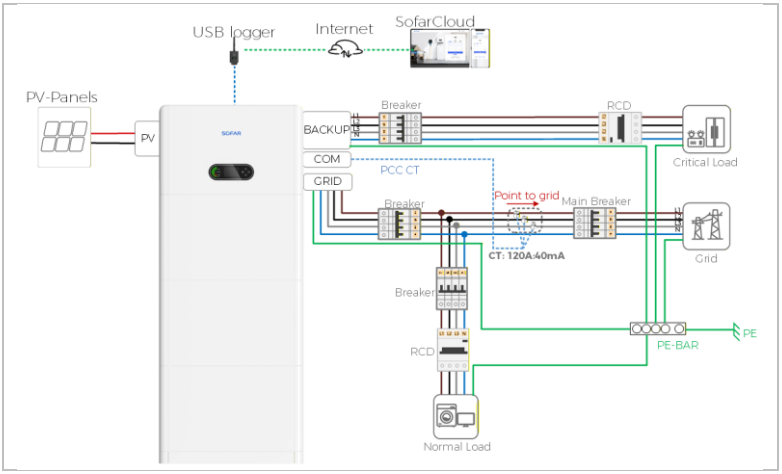

Figure 5-5: Electrical connections for most countries (system B: CTs)

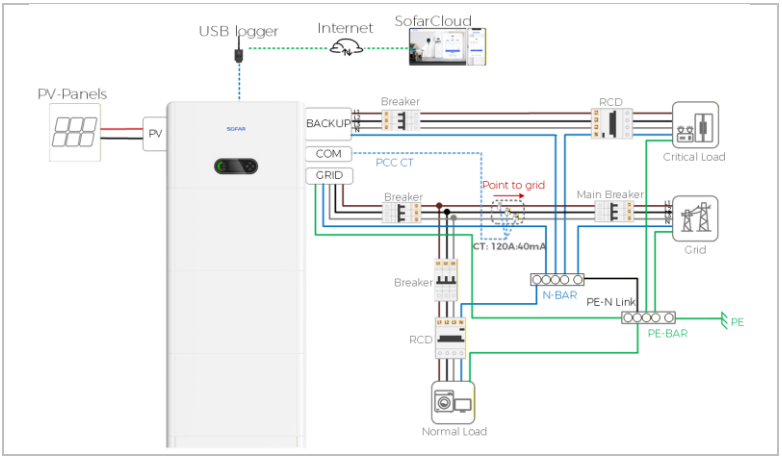

Figure 5-6: Electrical connections for Australia and New Zealand (system B: CTs)

Directly connected meter:

Technical data	
Nominal voltage	230 V AC/400 V AC, 50 Hz/60 Hz
Current measurement range	Direct connection: 0 to 80 A Connection through current transformers: > 80 A
Voltage measurement range	90 to 1,000 V (line voltage; potential transformers are required if the voltage is greater than 500 V)
Electricity metering accuracy	Class 1 (error within ±1%)
Power grid system	Active Class 1, Reactive Class 2
Baud rate	9,600 bps
Operating temperature	–25 °C to +60 °C
Installation mode	Guide rail-mounted

5.4.3 System C: measurement of energy with energy meter + CTs

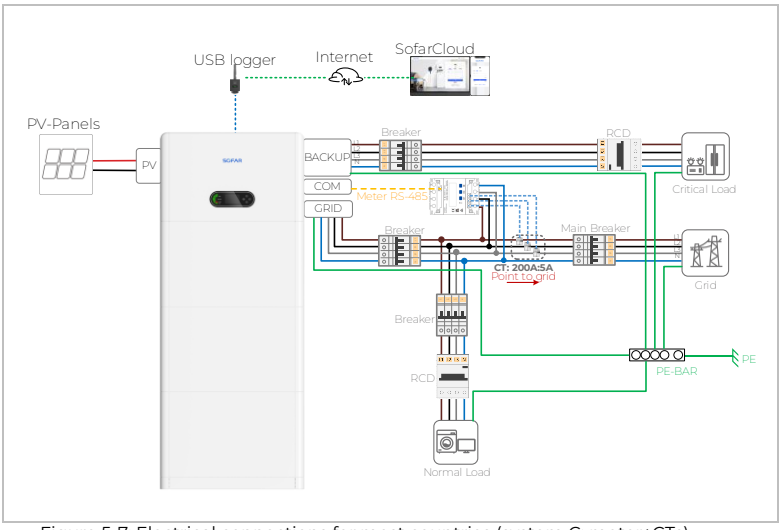

Figure 5-7: Electrical connections for most countries (system C: meter+CTs)

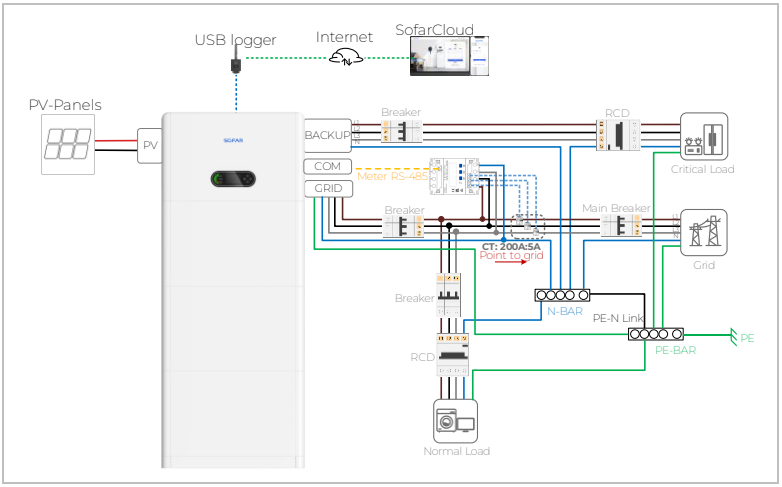

Figure 5-8: Electrical connections for Australia and New Zealand (system C: meter+CTs)

5.5 External electrical connection

5.5.1 PE cable connection

Connect the inverter to the equipotential bonding bar using the protective earth cable (PE) for earthing.

1. Remove the insulation of the cable. For outside use, the PE cable recommended for use in the EU depends on the protection breakers used and the length of the cable.
2. Install the earth cable to the right side of the inverter.

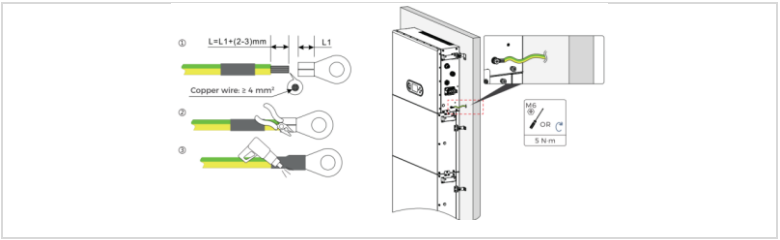

Figure 5-9: Connecting PE cable (a)

▶ As shown in Figure 5-9, the length of L2 needs to be 2–3 mm longer than L1.

- We recommend using 4 mm² ≤ PE cable ≤ 10 mm².

3. Install the earth cable from the inverter's left side to the battery.

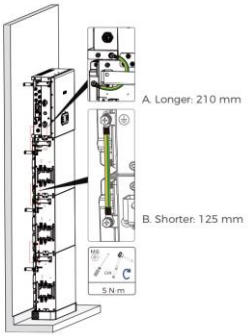

Figure 5-10: Connecting PE cable (b)

- The washer with the M6 screws and tighten them with a torque of 5 N·m using an Allen key.
- All inverter and battery enclosures must be connected to a PE cable.

NOTICE

Pole earthing is not permissible!

- As the inverter is transformerless, the plus and minus poles of the PV generator must NOT be earthed. Otherwise, the inverter will malfunction. In the PV system, not all live metal parts (e.g. PV module frames, PV frame, generator connection box housing and inverter housing) require earthing.
- The protective earthing of the chassis shell cannot replace the PE cable of the BACKUP port. Ensure that the two PE cables are reliably connected.
- When multiple inverters are used, ensure that the protective earth points of all inverters are equipotentially connected.

5.5.2 PV cable connection

Please observe the recommended cable dimensions:

Cable cross-section (mm²)		Outer diameter of cable (mm)
Range	Recommended value	
4.0 to 6.0	4.0	4.5 to 7.8

1. Remove the crimp contacts from the positive and negative connections.
2. Remove the insulation of the cables:

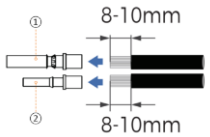

Copper wire: 4 to 6 mm²

①Positive DC cable	②Negative DC cable

Figure 5-11: Connecting PV (a)

3. Insert the positive and negative DC cables into the corresponding cable glands.
4. Crimp the DC cables. The crimped cable must be able to withstand a tractive force of 400 N·m.

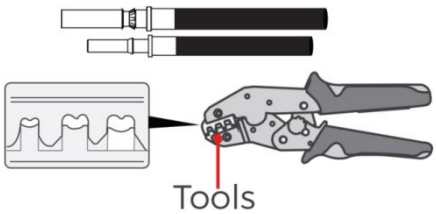

Figure 5-12: Connecting PV (b)

⚠ CAUTION

Risk of reverse polarity!

- Ensure that the polarity is correct before plugging into the DC connections!

5. Insert the crimped DC cables into the corresponding connector housing until you hear a "clicking" sound.

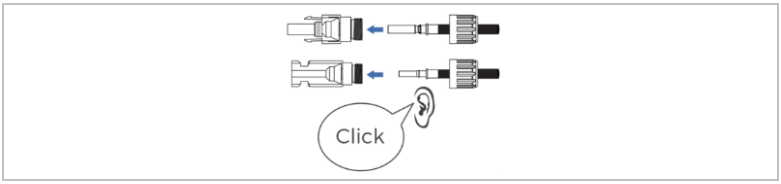

Figure 5-13: Connecting PV (c)

6. Screw the cable glands back into the connector housing.

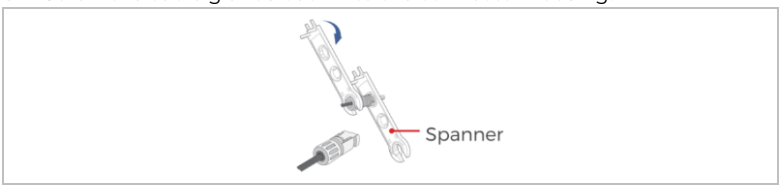

Figure 5-14: Connecting PV (d)

7. Use a multimeter to measure the voltage at both ends of the positive and negative terminals to ensure that the terminals are connected reliably.

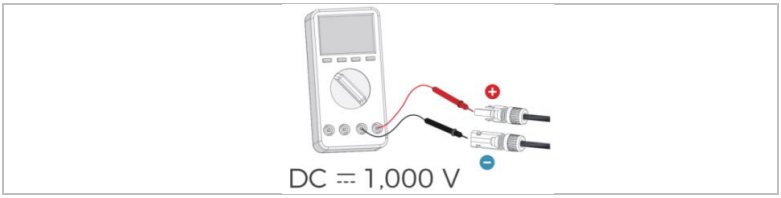

Figure 5-15: Testing PV (e)

8. Insert the positive and negative connectors into the corresponding DC input terminals of the inverter until you hear a "clicking" sound.

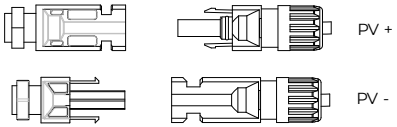

Figure 5-16: Connecting PV (f)

- Insert the protective caps into the unused DC connections.

CAUTION

Risk of DC arcing

- Before removing the plus and minus connectors, ensure that the DC switch has been set to OFF.

To remove the plus and minus connections from the inverter, insert a removal key into the lock and press on the key with adequate force as shown in the following figure:

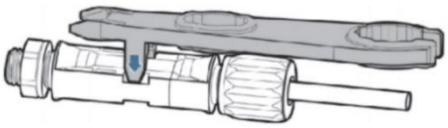

Figure 5-17: Disconnecting PV

5.5.3 BAT cable connection

- The battery connector is included in the battery accessory kit that comes with the battery.

1. Connect the inverter's BAT+ and BAT– ports to the battery module's B+ and B– cascade ports.
2. Connect the remaining battery modules from top to bottom.
3. Secure all cables with ties, and ensure every connection is tight.

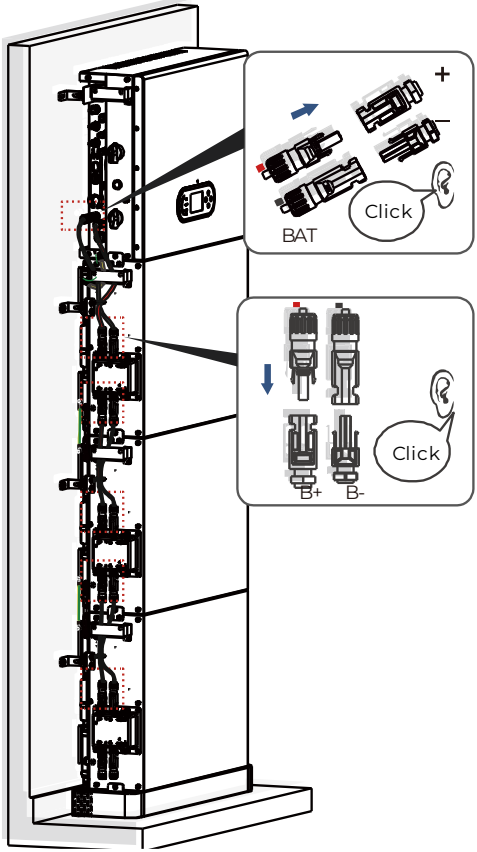

Figure 5-18: Connection of battery-internal DC terminal

5.5.4 BMS communication cable connection

1. Connect the inverter's "BAT CAN" to the battery module's "Link Port In".
2. connect the communication terminals from top to bottom.

- Tighten communication cable nuts in the order of large then small.
- Install a matching terminating resistor at the communication port of the system's last battery module.

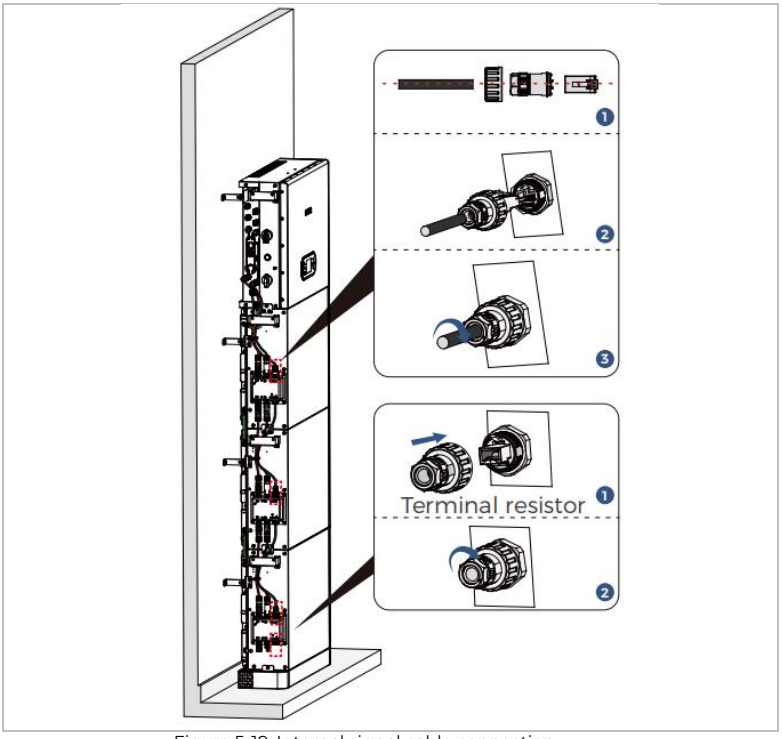

Figure 5-19: Internal signal cable connection

- The battery inputs of different inverters should not be connected in parallel.

5.5.5 Installation of logger

1. Remove the protective cap from the USB interface.
2. Install the Wi-Fi logger.
3. Tighten the connecting nut.

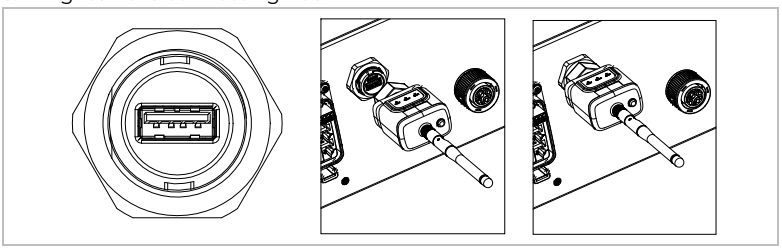

Figure 5-20: Wi-Fi connection

5.5.6 Installing the cover

When the electrical connections are complete and cable connections are correct and reliable, install the external protective cover and secure it using screws.

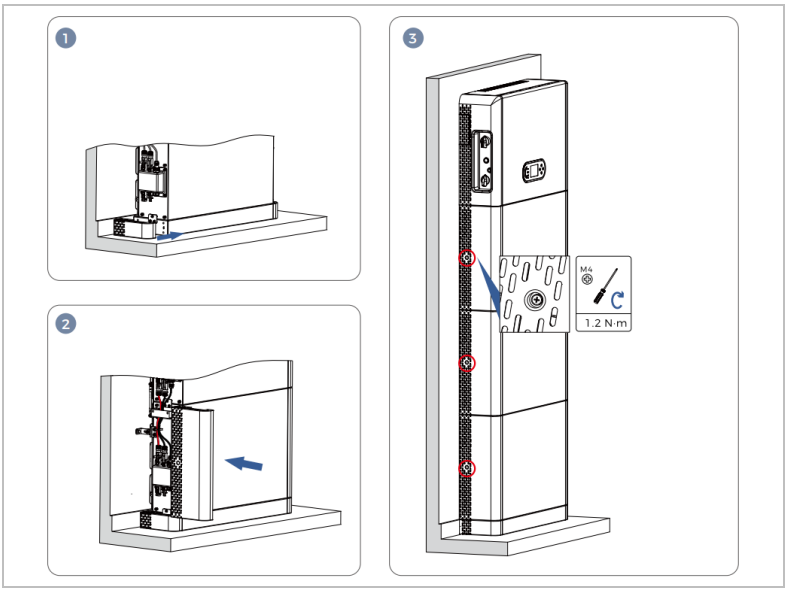

Figure 5-21: Installing the cover

5.5.7 AC GRID and BACKUP power cables connection

⚠ CAUTION

AC connection

- Each inverter must have its own circuit breaker.
- The AC disconnecting device must be easily accessible.

- The ESI-5...12K-T1 inverter has a Ground Fault Circuit Interrupter (GFCI). We recommend an RCD of type A featuring a residual current of 100 mA (suggested value) or higher.
- Please follow the national rules and regulations for the installation of external relays or circuit breakers!
  The AC cable should be correctly dimensioned in order to ensure that the loss of power in the AC cable is less than 1 percent of the rated output. If the AC cable resistance is too high, the AC voltage will increase; this may cause the inverter to disconnect from the power grid.

NOTICE

- The methods of AC GRID power cables connection are shown as followed. The methods of BACKUP power cables connection are the same.

1. Select appropriate cables and use a wire stripper to remove the insulation from the AC output cables.

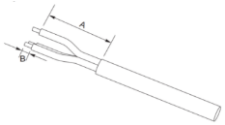

Figure 5-22: AC connection (a)

A: 30~50 mm	B: 3~5 mm

2. Guide the AC output cable through the cable gland.

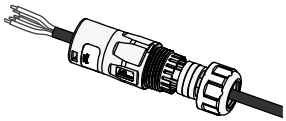

Figure 5-23: AC connection (b)

3. Insert the AC power cables into the corresponding holes according to the markings on the terminals, and secure them using the provided Allen key. Recommended torque: 1.2+/-0.1N·m

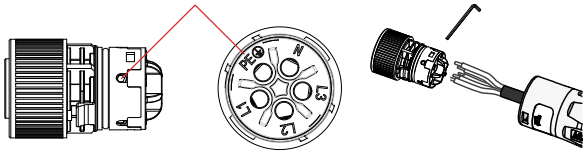

Figure 5-24: AC connection (c)

Connection	Cable
L1	Phase 1 (brown)
L2	Phase 2 (black)
L3	Phase 3 (grey)
N	Neutral conductor (blue)
PE	Earthing cable (yellow/green)

4. Plug the connector into the port and stop when you hear a click.

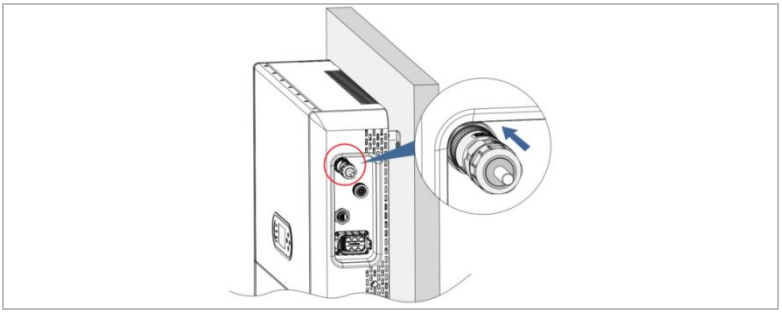

Figure 5-25: AC connection (d)

5. If you need to unlock the connector, we recommend using a flat-head screwdriver to swing the lock. And turn the lock counterclockwise as shown.

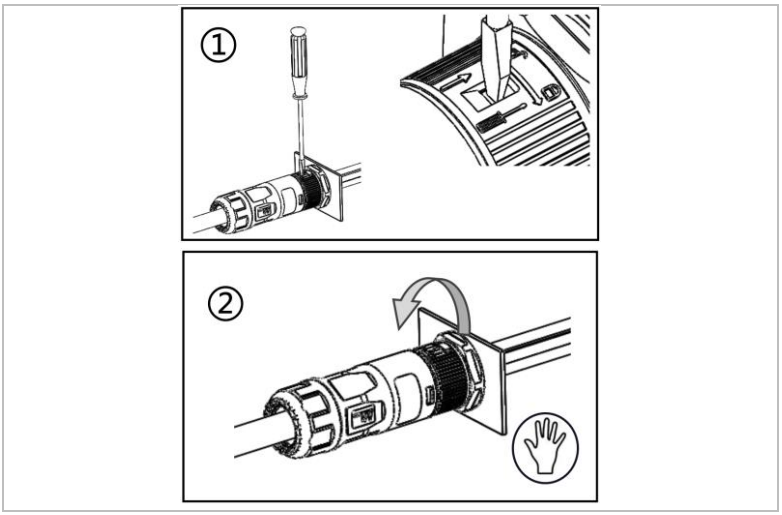

Figure 5-26:unlock AC connector

- Ensure the AC terminal cables (L1, L2, L3, N, PE) match the meter cables one-to-one when using the meter.
- Depending on the local grid standard, L1, L2, and L3 correspond respectively to either A, B, C; R, S, T; or U, V, W.

5.6 Communication interfaces

The positions of the communication interfaces of the ESI-5...12K-T1 are shown below:

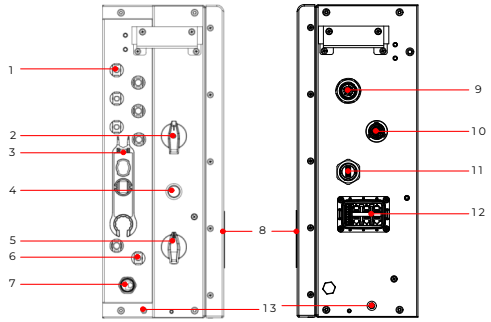

Figure 5-27: ESI-5...12K-T1 interfaces

No.	Connection	Function
7	BAT communication port	Connect the battery to read battery information or assist with battery software upgrades.
11	Wi-Fi/4G	USB port for firmware upgrade and safety parameter import; port for connection of stick logger (Wi-Fi).
12	Communication connection	Multifunctional communication ports, including parallel, Ethernet, Meter/CT, DRMS, charging pile, dry contact etc.

5.6.1 Multifunctional communication port definition

Please refer to the following table for the specific PIN assignments.

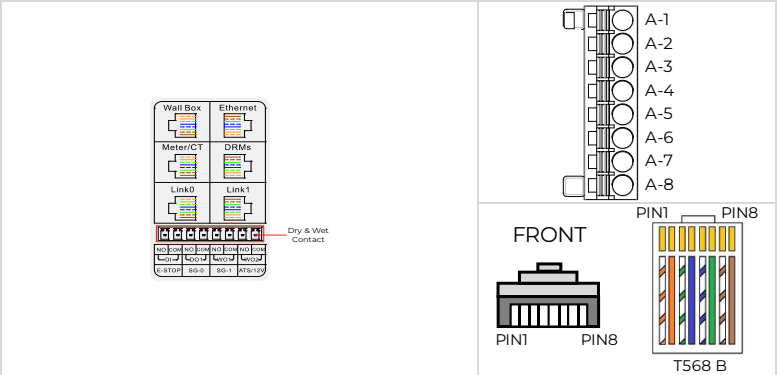

Figure 5-28: COM interfaces

Wall box			
Pin	**Colour**	**Connection**	**Function**
1	Orange/White	Wall box RS485 A	Wall box RS485 differential signal+
2	Orange	Wall box RS485 B	Wall box RS485 differential signal–

Meter/CT			
Pin	**Colour**	**Connection**	**Function**
1	Orange/White	Meter RS485 A	Meter RS485 differential signal+
2	Orange	Meter RS485 B	Meter RS485 differential signal–
3	Green/White	CT A+	CT A differential signal+
4	Blue	CT B+	CT B differential signal+
5	Blue/White	CT B–	CT B differential signal–
6	Green	CT A–	CT A differential signal–
7	Brown/White	CT C+	CT C differential signal+
8	Brown	CT C–	CT C differential signal–

DRMs			
Pin	**Colour**	**Connection**	**Function**
1	Orange/White	DRM1/5	DRM1/5
2	Orange	DRM2/6	DRM2/6
3	Green/White	DRM3/7	DRM3/7
4	Blue	DRM4/8	DRM4/8
5	Blue/White	GND	GND
6	Green	DRM0	DRM0
7	Brown/White	/	Internally shorted
8	Brown	/	

Link0 and Link1			
Pin	**Colour**	**Connection**	**Function**
1	Orange/White	RS485 A	Upper computer RS485A
2	Orange	RS485 B	Upper computer RS485B
3	Green/White	SYN_GND	Synchronising signal GND
4	Blue	CANH	CAN high data
5	Blue/White	CANL	CAN low data
6	Green	IN_SYN0	Synchronising signal 0
7	Brown/White	IN_SYN1	Synchronising signal 1
8	Brown	IN_SYN2	Synchronising signal 2

Dry & Wet Contact			
PIN	**Ports**	**Connection**	**Function**
1	E-STOP	DI NO	Use for Emergency STOP (If ENABLE) DI NO connects with DI COM: RUN DI NO disconnects with DI COM: STOP More details please refer to 5.6.7.
2		DI COM	
3	SG-0	DO1 NO	It can be controlled through the LCD. More details please refer to 5.6.8.
4		DO1 COM	
5	SG-1	WO1 NO	
6		WO1 COM	
7	ATS/12V	WO2 NO	It can be controlled through the LCD. More details please refer to 0.
8		WO2 COM	

- Link port for Ethernet: Ethernet (reserved, not active yet)
- The voltage of the Dry & Wet Contact port must not exceed 28V and must be less than 1A. Otherwise, it may damage the hardware circuit and cause related functions to fail.

5.6.2 Multifunctional communication cable production

1. Prepare an RJ45 cable according to the length of the connector appropriate for opening one end of the cable:

Figure 5-29: COM connector production (a)

2. Remove the rubber plugs from the COM connector and pull out the appropriate number of plugs according to the desired function:

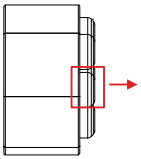

Figure 5-30: COM connector production (b)

3. After removing the stopper, pass the cable through the connector gland, connector clip and connector through-hole. Crimp the cable to the terminal connector in the colour shown below:

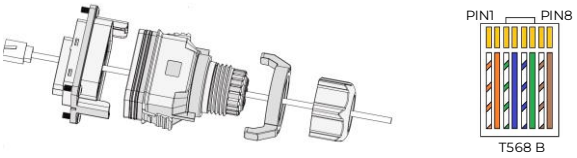

Figure 5-31: COM connector production (c)

4. After assembling the connectors in order, insert the RJ45 connector into the corresponding terminal of the COM port:

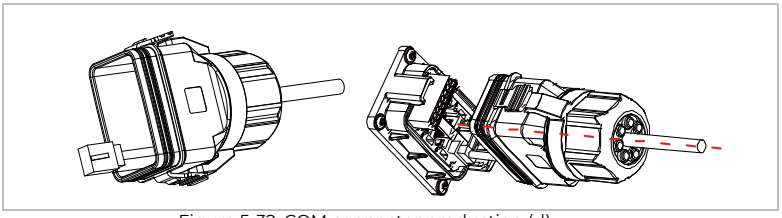

Figure 5-32: COM connector production (d)

5. Locking the connector housing to inverter COM port:

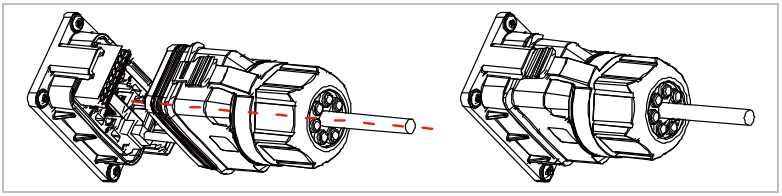

Figure 5-33: COM connector production (e)

5.6.3 Smart meter

The ESI 5...12K-T1's integrated energy management functions necessitate measurement of the power flow at the grid interconnection point. When measuring with a smart meter, this can be accomplished via one of two system configurations: a directly connected smart meter, or a smart meter equipped with CTs.

The pin assignment for the RS485 connection between the inverter and smart meter can be found in the table below.

Inverter COM port pin	Function	Meter pin
Meter/CT PIN1	Meter RS485 A	Pin 24
Meter/CT PIN2	Meter RS485 B	Pin 25

▶ The smart meter shows a positive power value for feed-in to the grid and a negative value for energy purchase from the grid.

- Use the shielded twisted pair cable.
- The copper outer diameter should be more than 0.5 mm².
- Keep away from power cables and other electric fields.
- Use terminating resistors at the ends of the RS485 line to improve signal quality.

NOTE:

During electric meter measurements, it is recommended to wrap the magnetic ring supplied in the accessory kit around the communication cable as shown in Figure 5-34 to enhance electrical performance, following a 5-inside, 4-outside winding pattern (i.e., 5 turns along the ring's inner circumference and 4 turns along its outer circumference).

Figure 5-34: Winding the magnetic ring on the meter's communication line

Smart meter with direct connection (system A, default configuration)

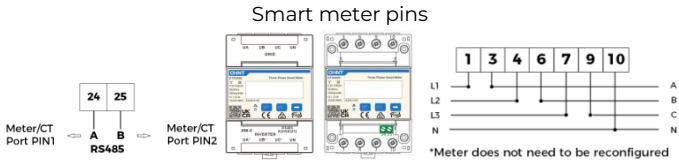

Figure 5-35: Direct meter

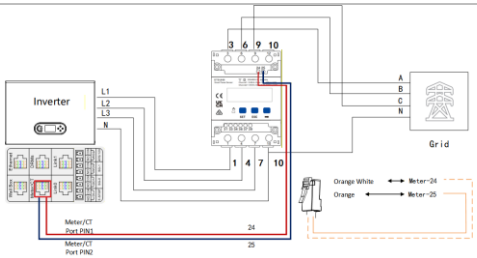

Note: The color is for reference only. Connection specification:
Inverter Meter/CT Port Pin1 → Meter Pin24(RS485A)
Inverter Meter/CT Port Pin2 → Meter Pin25(RS485B)

Figure 5-36: Direct meter electrical connection

- No additional configuration required for direct-connected meters.
- Up to 80 A measurement.
- Accuracy class and load rating (VA/Ω): class 1.
- Rated operating voltage: 90–1,000 V (line voltage; potential transformers are required if the voltage is greater than 500 V).
- Rated frequency: 50~60 Hz
- Ambient temperature: –25°C~60 °C
- Altitude: ≤ 3,000 m

Smart meter with CTs connection (system C)

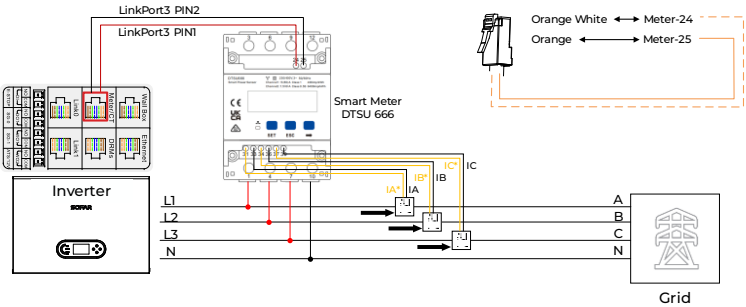

Figure 5-37: smart meter with CTs

- The inverter connected to the meter is a power generation device, and the function of the meter connected to the traditional load (electrical device) is the opposite. Therefore, for our product, when the power is output to the grid, the electricity meter will show a positive value, and when the power is purchased from the grid, it will show a negative value.
- If you need to modify or check the meter's related settings, please refer to the meter's user manual.

5.6.4 Parallel port

In systems with multiple inverters, you can connect the devices in a master/slave configuration. In this configuration, only one energy meter is connected to the master inverter for system control.

- In **Off-grid mode**, a maximum of **three** inverters can be connected in parallel.
- In **On-grid mode**, a maximum of **six** inverters can be connected in parallel.
- In systems with multiple inverters, the parallel communication cable shall not exceed 10 m between the inverters.
- The inverter has not been tested to AS/NZS 4777.2:2020 for multiple inverter combinations, so combinations should be used in accordance with the requirements of AS/NZS 4777.1.

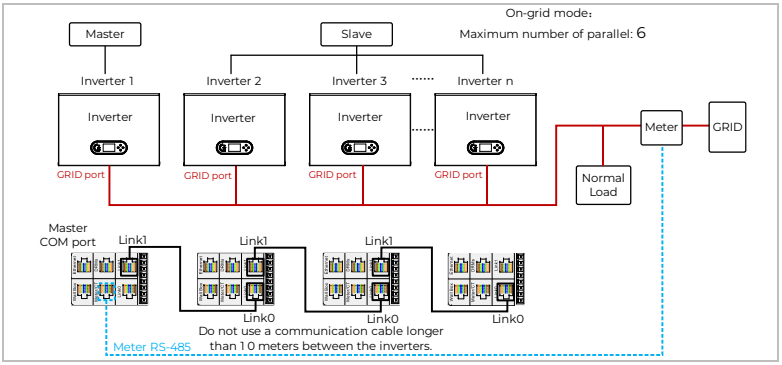

Figure 5-38: Parallel system (On-grid mode)

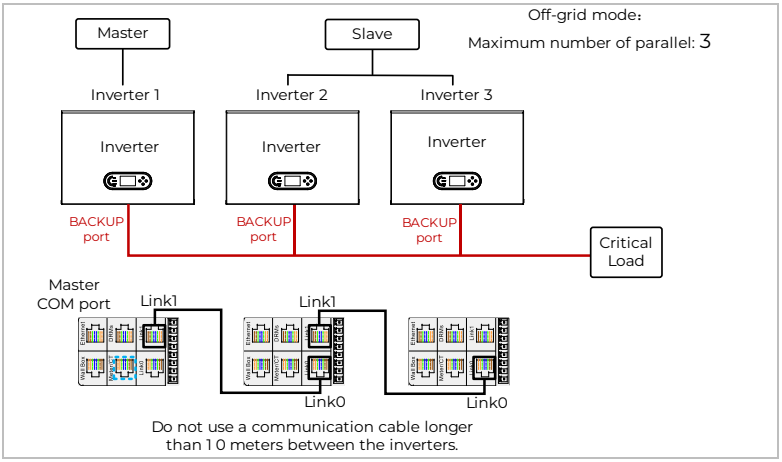

Figure 5-39: Parallel system (Off-grid mode)

LCD settings:

For **Master inverter**: Main menu → Advanced Settings(password:0715) → Parallel Settings → Parallel Control(Enable) → Master-Slave(Master)

For **Slave inverter**: Main menu → Advanced Settings(password:0715) → Parallel Settings → Parallel Control(Enable) → Master-Slave(Slave) → Parallel Address(02/03...)

Parallel setting

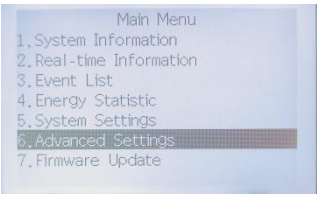	Select **Advanced Settings.**
	Select Parallel Settings.
	Enter the password 0715.
	Master inverter To configure Inverter 1, set the parallel control from "Disable" to "Enable"; it will default to master mode.
	Slave inverters Configure the remaining inverters (2 through *n*) in sequence to set up the parallel system: set the parallel address for each slave unit to a unique value from 2 to 6. Note: The maximum number of parallel units for a three-phase ESI inverter is six.

- In the parallel operating mode, emergency power supply, generator mode and unbalanced support need to be turned off remotely first.

The settings for the slave units must be made on the master machine after remote shutdown.

- Be careful when the parallel inverters are connected; the communication cable should not be bundled with the power cable (GRID – BACKUP) in one cable channel or be very close to it, as it may cause abnormal faults in the parallel system. It is preferable to pass the communications cables through a separate cable channel.

5.6.5 DRMs/logic interface

The DRMs/logic interface is used to control the inverters feed-in or purchase of power by external signals, usually provided from grid operators with ripple control receivers or other means. DRM0 can be used for a switch-off signal from external grid protection devices.

The logical interface pins are defined according to the requirements of different standards. Please connect according to the safety requirements of your country (see below for a brief description of the safety requirements).

First, connect the DRMs port cable to the COM port cable set to the control unit in accordance with the wire sequence required by the safety regulations:

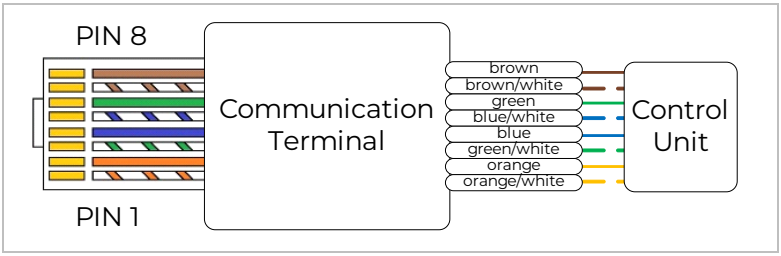

Figure 5-40: DRM connection (a)

Connect the RJ45 terminal on the other end of the COM connector to the DRMs port:

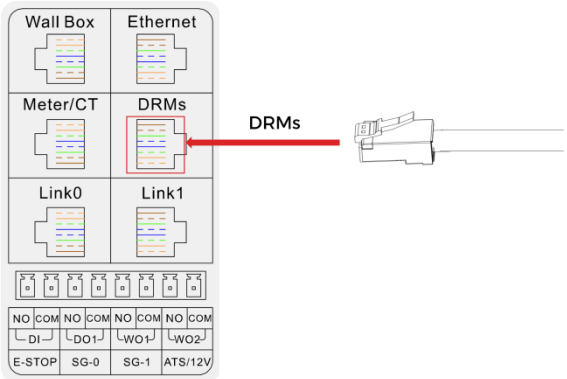

Figure 5-41: DRM connection (b)

Function description

Also known as inverter Demand Response Modes (DRMs).

The inverter recognises all supported demand response commands and initiates the reaction within two seconds. The inverter will continue to respond while the mode remains asserted.

Pin	Colour	Function
1	Orange/White	DRM1/5
2	Orange	DRM2/6
3	Green/White	DRM3/7
4	Blue	DRM4/8
5	Blue/White	RefGen / GND
6	Green	DRM0
7	Brown/White	Internally shorted
8	Brown	

▶ **Method of asserting demand response modes:**

Mode	Real current limit (referenced to inverter rated per phase current)
DRM0	Shutdown
DRM1	Import = 0
DRM2	Import < 50%
DRM3	Import < 75%
DRM4	100%
DRM5	Generate = 0
DRM6	Generate < 50%
DRM7	Generate < 75%
DRM8	100%

Note: The inverter only shutdown in DRM0 mode. In DRM1~4 mode, the inverter will limit the power import from the grid. In DRM5~8 mode, the inverter will limit the power generate to the grid

▶ **Enable the function using the LCD**

Main Menu → Advanced Settings → (Passwords: 0715) → Logic Interface → DRM0/DRMn → Enable/Disable

Note: This function is disabled by default. If you are certain that this function needs to be enabled, please refer to the safety requirements of your country. Otherwise, the inverter may not operate as expected.

Circuit diagram for DRMn mode

Logic interface for VDE-AR-N 4105:2018-11

This function serves to control and/or limit the output power of the inverter. The inverter can be connected to a radio ripple control receiver in order to dynamically limit the output power of all inverters within the system.

RCR: Ripple control receiver is an interface between a PV system and power grid company.

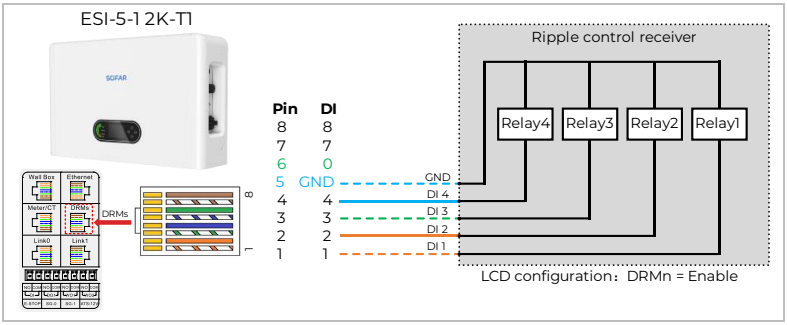

Figure 5-42: DRM connection (c)

The inverter is preconfigured on the following power levels:

Pin	Name	Parameter	Pre-configuration Power Limit*
1	DI 1	Relay1 engaged	0%
2	DI 2	Relay2 engaged	30%
3	DI 3	Relay3 engaged	60%
4	DI 4	Relay4 engaged	100%
5	GND	Internal signal	/

*) When using this function on your own, make sure that the normally open relay is disconnected before use and provide the drive signal for the relay on your own.

*) Priority: DI 1 > DI 2 > DI 3 > DI 4

*) Customized limits with SOFAR Cloud/SOFAR APP

Logic interface for EN50549-1:2019

Active power output can be ended within five seconds following a command to the input interface.

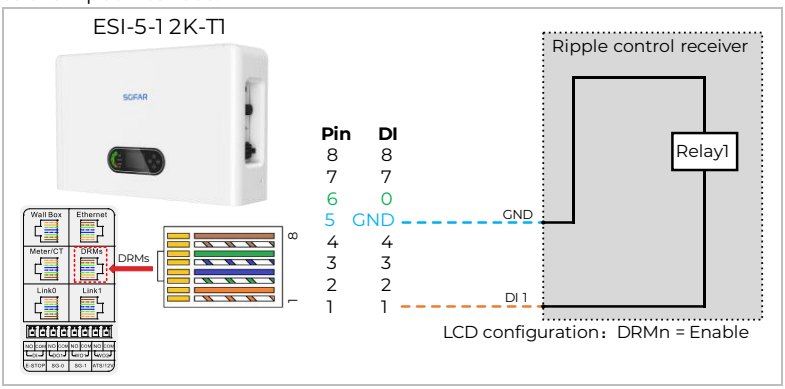

Figure 5-43: DRM connection (d)

Functional description of the terminal

Pin	Name	Inverter	Pre-configuration Power Limit*
1	DI 1	Relay1 engaged	Generate=0
5	GND	Internal signal	/

*) When the logic interface is set to DI 1= DRM5, the output power of the inverter to the grid is limited to 0.

*) Customized limits with SOFAR Cloud/SOFAR APP.

Circuit diagram for DRMn in Parallel mode

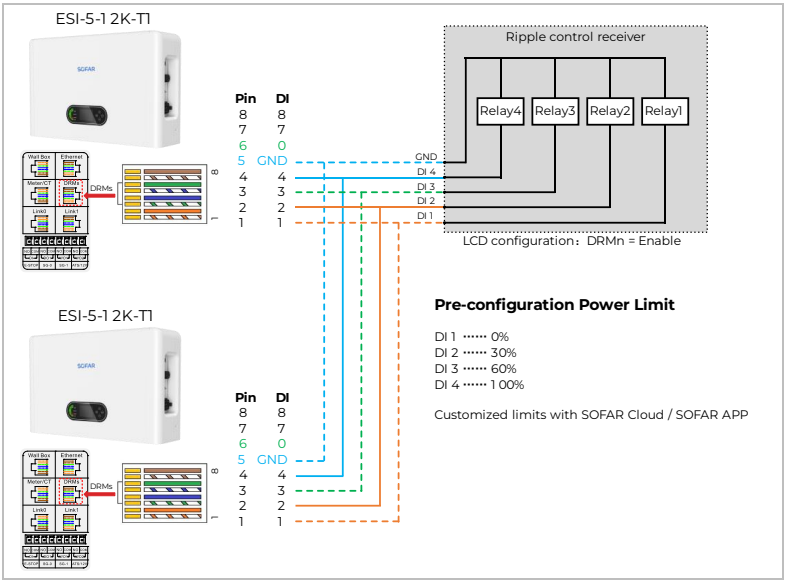

Figure 5-44: DRM connection (e)

Circuit diagram for DRM0-Shutdown mode

Logic interface for EN50549-1:2019/ VDE-AR-N 4105:2018-11 DRM0 Shutdown

*Integrated coupling switch that can also be used in conjunction with a central NA protection in accordance with (VDE-AR-N 4105:2018-11, §6.4.1).

Circuit diagram for DRM0-Shutdown for single inverter

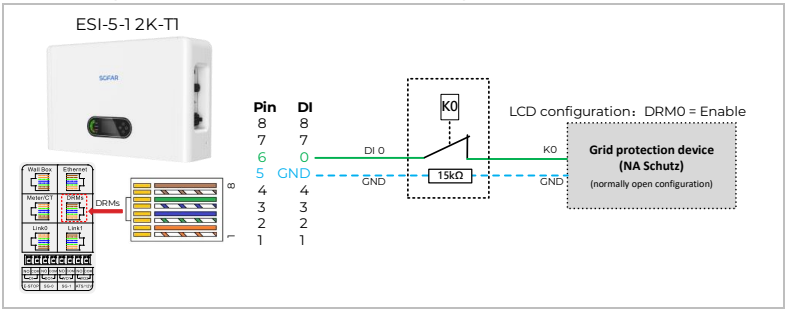

Figure 5-45: DRM connection (f)

Circuit diagram for DRM0-Shutdown in Parallel mode

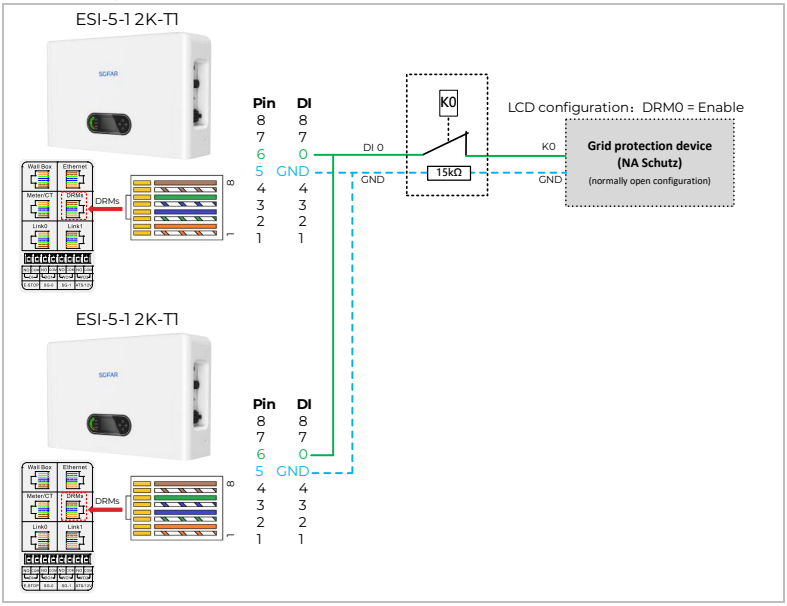

Figure 5-46: DRM connection (g)

5.6.6 Wall Box

SOFAR Residential ESS + Wallbox adds Wallbox system based on the residential storage system, which supports charging with PV power and multiple modes for energy management.

Wallbox residential storage inverter and storage battery are combined. Utilizing surplus photovoltaic energy to charge vehicle. Inverter carries out energy scheduling according to the actual load need and realize that the surplus PV energy is used to charge the load.

Inverter COM Port Pin	Function
Wall Box PIN1	RS485 A
Wall Box PIN2	RS485 B

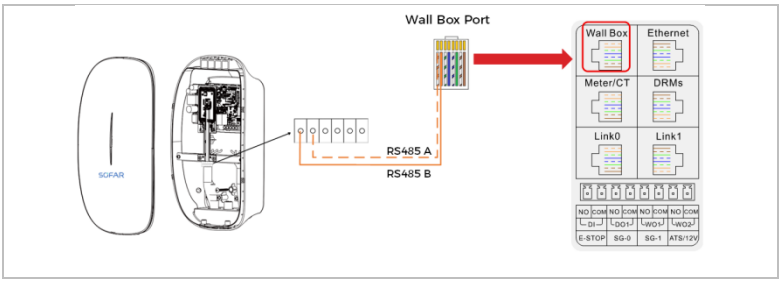

Figure 5-47: Wall Box communication connection

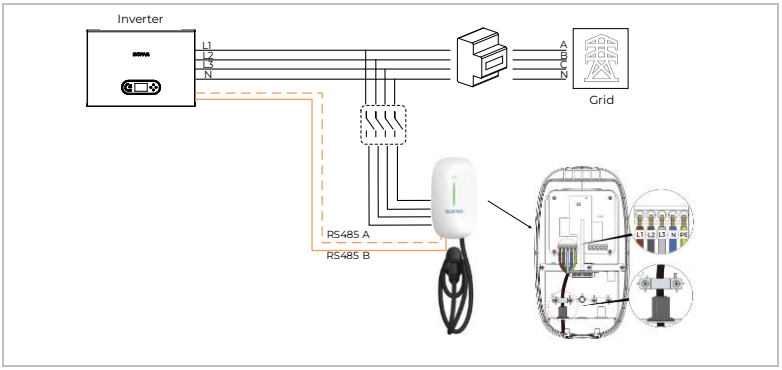

Figure 5-48: Wall Box AC connection

5.6.7 Emergency STOP

The ESI-5...12K-T1 has Emergency STOP function. To enable this function, please refer to the following steps:

▶ A. Connection interfaces

DI NO and DI COM are used for Emergency STOP.

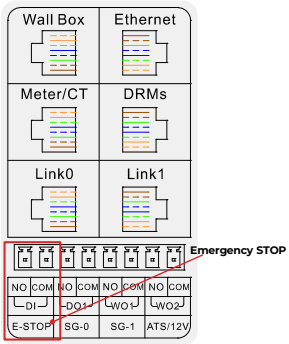

Figure 5-49: DI connection

B. Function setting

Enable the function using the LCD:

Main Menu → Advanced Settings → (Passwords: 0715) → E-STOP → Enable

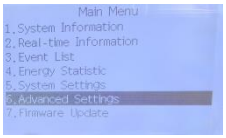

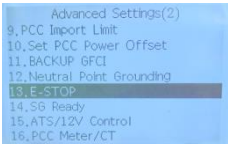

DI NO connects with DI COM: RUN

DI NO disconnects with DI COM: STOP

C. Application example

Normal work:

Pin1(DI NO) is connected with Pin2(DI COM) by the button.

Emergency STOP:

PUSH the button. Pin1(DI NO) disconnects with Pin2(DI COM). The inverter will stop working.

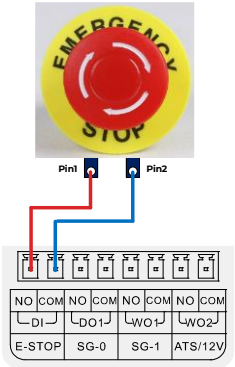

Figure 5-50: Emergency stop

5.6.8 SG-0 & SG-1

They can serve as signals to control the load.

Control the function using the LCD:

Main Menu → Advanced Settings → (Passwords: 0715) → SG Ready → Stop/Start/Timing Mode/Smart Mode

Mode	LCD	Description
Stop		Default setting: DO1 NO disconnects with DO1 COM. WO1 NO disconnects with WO1 COM and no voltage output.

Mode	LCD	Description
Start		DO1 NO connects with DO1 COM. WO1 NO outputs +12V (WO1 COM is the GND).
Timing Mode	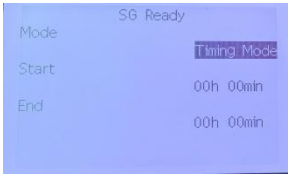	Set the start and end times. The smart load will be active only during this scheduled period and will turn off automatically outside of it.
Smart Mode	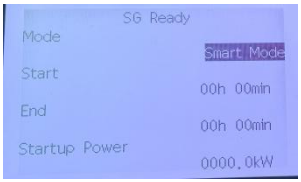	Set the start time and stop time in the start time range, generating power - load power > 500W (hysteresis loop parameter reservation can be set), last for 5 minutes to turn on the intelligent load; load power - generating power > 500W, last for 1 minute to turn off the intelligent load.

5.6.9 ATS/12V

This signal can distinguish whether the inverter is working in off-grid mode.

Control the function using the LCD:

Main Menu → Advanced Settings → (Passwords: 0715) →ATS/12V Control → Disable/Off-grid: 12V Turn On/Off-grid: 12V Turn Off

Mode	Description
Disable	WO2_NO maintains no voltage output regardless of whether the inverter is working in off-grid mode or not.
Off-grid: 12V Turn On	When the inverter is working in off-grid mode → WO2_NO outputs +12V(WO2 COM is the GND) When the inverter is **NOT** working in off-grid mode → WO2_NO maintains no voltage output.
Off-grid: 12V Turn Off	When the inverter is working in off-grid mode → WO2_NO maintains no voltage output. When the inverter is **NOT** working in off-grid mode → WO2_NO outputs +12V(WO2 COM is the GND)

6 Commissioning the inverter

6.1 Safety test before commissioning

NOTICE
Check the voltage range ▶ Ensure that the DC and AC voltages are within the permissible range of the inverter.

6.2 Double check

Please ensure that the inverter and all wiring are installed correctly, securely and reliably and that all environmental requirements are met.

1. Inverter is firmly fastened to the wall.
2. PV+/PV– wires are firmly connected, and polarity and voltage are correct.
3. BAT+/BAT– wires are firmly connected, and polarity and voltage are correct.
4. DC isolator is correctly connected between battery & inverter, and DC isolator is OFF.
5. GRID/BACKUP cables are securely/correctly connected.
6. AC circuit breaker is correctly connected between inverter GRID port & GRID, and circuit breaker is OFF.
7. AC circuit breaker is correctly connected between inverter BACKUP port & critical load, and circuit breaker is OFF.
8. For lithium battery, please ensure that the communication cable has been correctly connected.

6.3 Start the inverter

Please follow the steps below to switch the inverter ON.

1. Make sure there is no power generation in inverter from grid.
2. Switch the DC switch on the PV side of the product to ON.
3. Switch the DC switch on the battery side of the product to ON, and press the battery black start button to activate the battery.
4. Turn AC circuit breaker between the inverter GRID port & GRID ON.
5. Turn AC circuit breaker between the inverter BACKUP port & critical load ON.
6. Inverter should start to operate now.

6.4 Initial setup

You need to set the following parameters before the inverter will start to operate.

Parameter	Note
1. Language setting	The default is English.
2. System time setting	When connected to the server or via the app, the system time is automatically synchronized to your local time.
3. Safety parameter import	Refer to the country code table below and select country and code.
4. Application scenario setting	According to the user application scenario configuration, set the parameters of the PV port, BAT port, GRID port and BACKUP port.
5. Work mode setting	Set different working modes, configure parameters for different working modes (Self-use, Feed-in Priority, Peak Shaving, Time-of-use, Passive) and set battery energy storage parameters (Charge Cut-off SOC, On-grid Discharge Cut-off SOC, Off-grid Discharge Cut-off SOC, Off-grid Discharge Recovery SOC).

The default operating mode is Self-use mode.

6.5 Check or change the GRID code

You can check or change the GRID code through the LCD screen:

Main Menu → System Settings → Grid Code → Password xxxx → Confirm

- Different distribution network operators in various countries have differing requirements for the grid connection of grid-coupled PV inverters.
- Ensure that you have selected the correct country code according to the requirements of the regional authorities and consult a qualified electrician or employees of electrical safety authorities.
- SOFAR is not responsible for the consequences of selecting an incorrect country code.
- The selected country code defines the grid compliance limits. The inverter monitors these limits continuously and will disconnect from the grid if they are violated. Users are not able to change the grid compliance limits.

6.6 Check the inverter firmware version

The current firmware version of the inverter can be viewed on the LCD screen by performing the following steps.

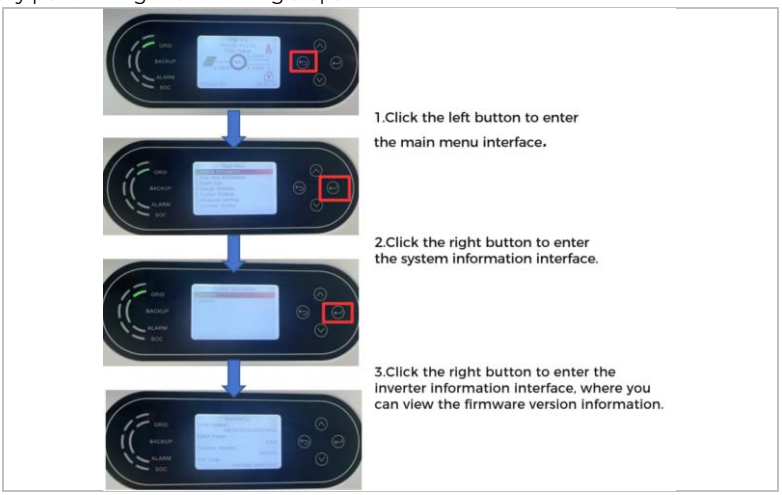

6.7 RS485 and logger

ESI-5...12K-T1 inverters provide various communication methods for system monitoring:

① You can connect RS485-linked devices to your PC

② Wi-Fi logger (standard) or 4G logger

6.7.1 RS485

You can connect RS485-linked devices to your PC:

Link0 and Link1			
Pin	**Colour**	**Connection**	**Function**
1	Orange/White	RS485 A	Upper computer RS485A
2	Orange	RS485 B	Upper computer RS485B

- The RS485 line must not be any longer than 1,000 m
- Assign each inverter its own Modbus address (1 to 31) via the LCD display

6.7.2 Setting up the Wi-Fi logger with the app

When you have installed the logger, the inverters can directly upload your operating, energy and alarm data to the SofarCloud monitoring portal.

To download the app, search for "SofarCloud" in the Apple or Google Play Store, or use the following QR codes:

- **SofarCloud** (for end customers):

Scan the QR code on the inverter using the app or connect the inverter with Bluetooth (Initial password: 071500) to set the inverter data.

- You can change your Bluetooth password in the following ways: Main Menu → Advanced Settings → Bluetooth Settings
- If Bluetooth connection fails repeatedly, please contact us.
- For additional app permissions like firmware upgrade or safety settings, please contact your local SOFAR service.

Configuration steps

1. After starting the app, register as a new user or enter the current SofarCloud access data.
2. Create a new system and save the system data.
3. Scan the barcode of the stick logger to assign an inverter to the system.
4. Go to the newly created system in order to configure the stick logger (device/logger).
5. Press the button on the Wi-Fi logger for 1 second to activate the WPS mode of the stick so that the smartphone can be connected to the Wi-Fi logger.
6. Now select your local Wi-Fi network for Internet access and enter your Wi-Fi password.
7. The Wi-Fi logger is configured with the access data.

Wi-Fi logger configuration network

Step 1 The phone connects to the Wi-Fi, but it should be noted that the Wi-Fi needs to be the same as the Wi-Fi that the logger is connected to.

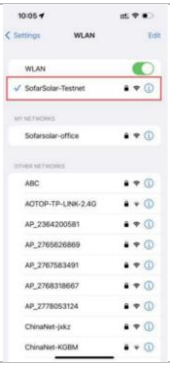

Step 2 Open SofarCloud, go to "Maintenance" and click "Scan".

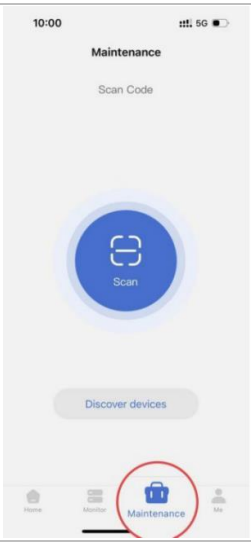

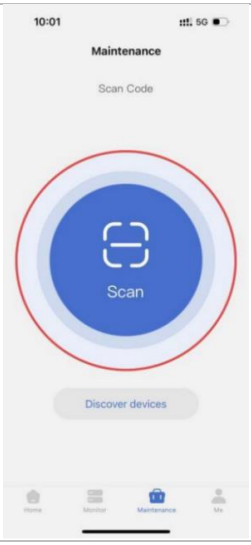

Step 3 The app aligns the QR code of the logger and scans it.

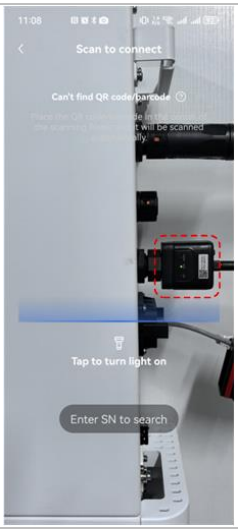

Step 4 Select Wi-Fi logger and enter the Wi-Fi password manually.

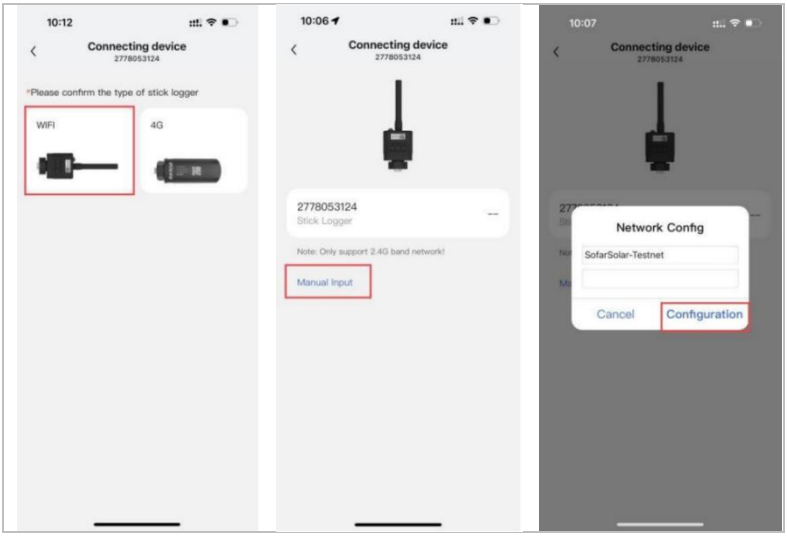

Step 5 Follow the instructions in the app step by step.

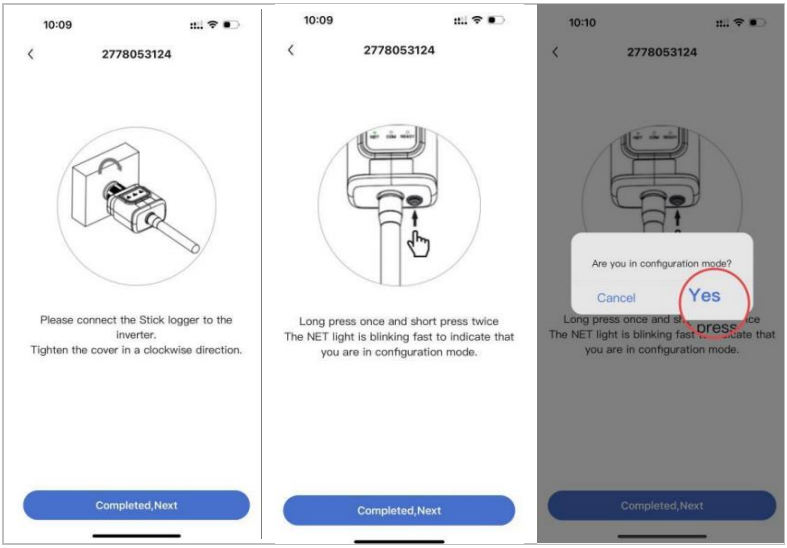

Step 6 Wait for the app to connect to the capture stick. After successful configuration, wait for about 5 minutes for SofarCloud to have the data reported.

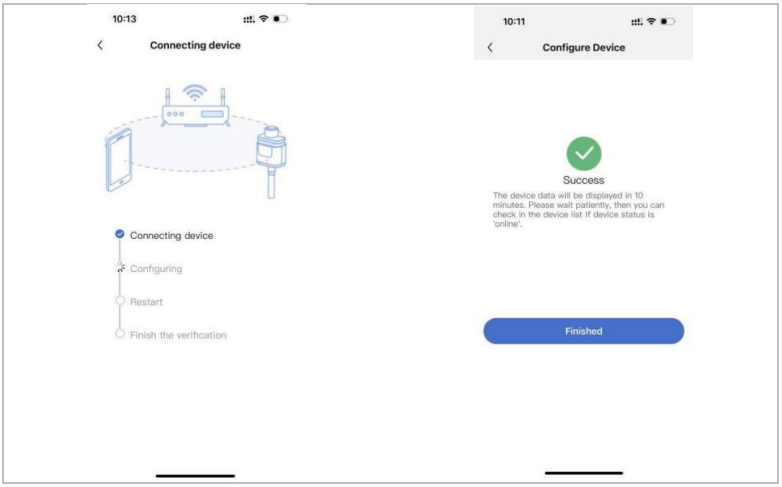

Wi-Fi logger status

The LEDs on the Wi-Fi logger provide information regarding the status:

LED	Status	Description
NET	Communication with router	On: Connection to server successful
		Flashing (1 sec): Connection to router successful
		Flashing (0.1 sec): WPS mode active
		Off: No connection to router
COM	Communication with inverter	Flashing (1 sec): Communication with inverter
		On: Logger connected to inverter
		Off: No connection to inverter
READY	Logger status	Flashing (1 sec): Normal status
		Flashing (0.1 sec): Reset in progress
		Off: Error status

Reset button

Push duration	Description
1 sec	WPS mode
5 sec	Restart
10 sec	Restart (reset)

6.7.3 Configuration of the Wi-Fi logger via the web browser

Preparation: The Wi-Fi logger is installed in accordance with the previous section, and the SOFAR inverter must be in operation.

- Wi-Fi network must support 2.4 GHz mode. Wi-Fi logger logger does not support the 5 GHz network!
- The stick loggers use outgoing TCP port 10000. In case your router has limited ports, please expand it for the stick logger.

Carry out the following steps in order to configure the Wi-Fi logger:

1. Connect your PC or smartphone with the Wi-Fi network of the Wi-Fi logger. The name of this Wi-Fi network is "AP", followed by the serial number of the Wi-Fi logger (see rating plate). When you are prompted for a password, you can find it on the label of the Wi-Fi logger (PWD).
2. Open an Internet browser and enter the address **10.10.100.254**.
3. Enter the username and password, which are both set to "**admin**" by default. The "Status" page will be opened.
4. Click the "Wizard" in order to configure the Wi-Fi logger for Internet access.

Result: The Wi-Fi logger begins to send data to SofarCloud.

If you have never registered an account in the management system, you can register it using the Installer Registration function. Registering the first installer user also enrols a company.

Step 1 Open a web browser, enter https://eu.sofarcloud.com in the address box and press **Enter**. The login page is displayed.

Step 2 Click **Register**. The **Registration** page is displayed.

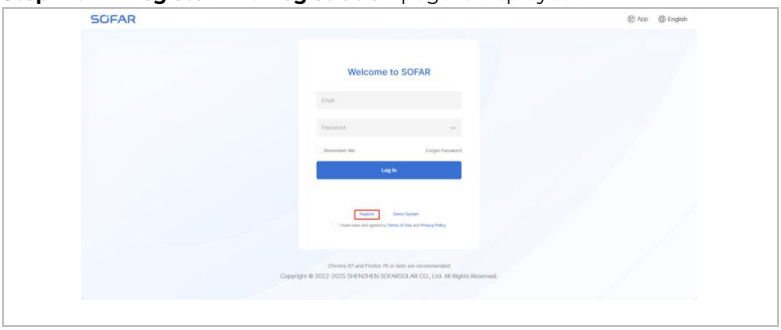

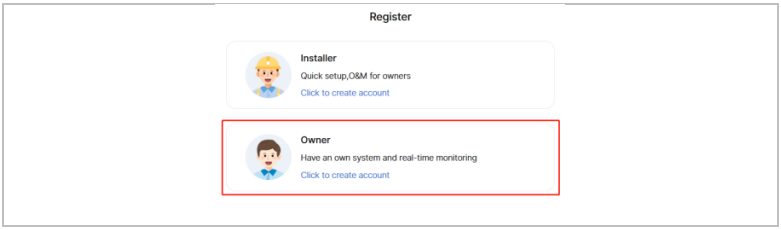

Step 3 Sign up as an owner as prompted.

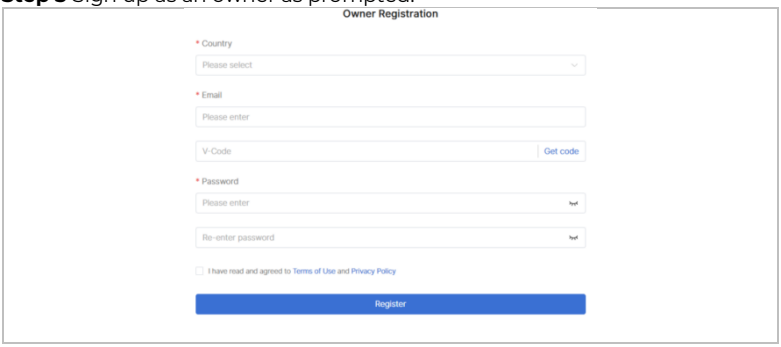

7 Operation of the device

This chapter describes the LCD and LED displays of the ESI-5...12K-T1 inverter.

7.1 Buttons and display lights

Buttons

Button	Name	Description
	Back	Previous screen, enter menu
	Up	Select previous menu item, increase setting value
	Down	Select next menu item, decrease setting value
	Enter	Enter menu item, select next digit, confirm setting

LEDs

State	Colour	State
On-grid	Green	Normal
	Green (flashing)	Standby
Off-grid	Green	Normal
	Green (flashing)	Standby
Alarm	Red	Fault

7.2 Standard display

The screen shows all relevant information of the inverter:

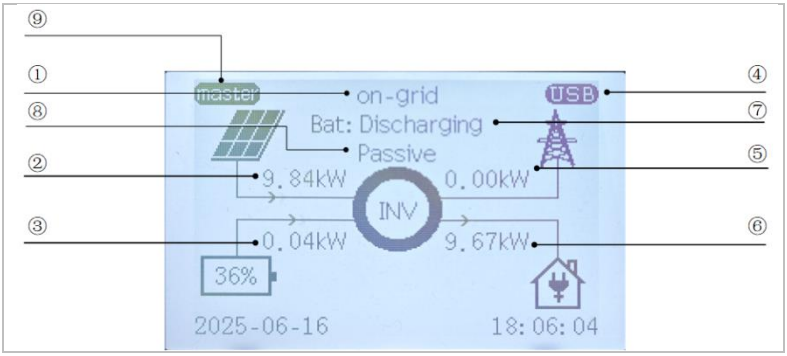

① Current status of the inverter	It is used to display the current working status of the inverter, including grid-connected, off-grid and standby.
② PV power	For displaying photovoltaic power.
③ Battery power	For displaying BAT charge or discharge power. There is no battery marking here if a battery is not connected.
④ Accessory	This is used to display the accessories currently connected to the inverter, including the capture stick, USB and smart meter.
⑤ Grid power	Power flowing into or out of the grid.

⑥ **Home consumption**	Energy consumed by household loads.	
⑦ **PV channel enable state**	Used to display the current number of PV input channels open.	
⑧ **Work mode**	Displays the current operating mode of the inverter (the specific operating mode is described in 7.3).	
⑨ **Master/slave state**	master slave	Used to connect multiple inverters in parallel, indicating whether the current inverter is in the master or slave position.

7.3 Work modes

The ESI-5...12K-T1 comes with several integrated energy management modes.

NOTICE
To move to the Work mode setting ▶ Go to **Main menu** → System Settings → Work Mode

7.3.1 Self-use mode

The self-use mode is suitable for areas with low feed-in subsidies and high electricity prices. The power of PV will supply the loads first, and the surplus power will charge the battery, then the remaining power will feed into the grid.

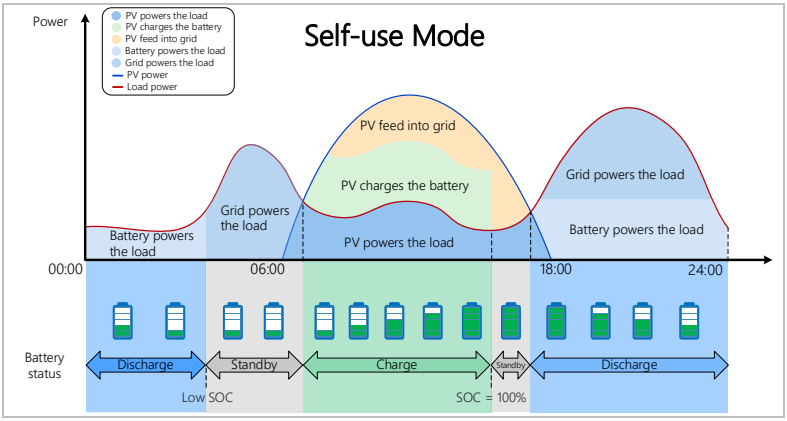

PV is sufficient: The power generated from PV prioritizes supplying the load. Any excess power is then directed towards charging the battery, and if there is still surplus electricity, it can be sold to the grid.

PV is insufficient: The battery discharges power to the load, and once its capacity reaches Min SOC, it automatically ceases discharging.

Figure 7-1: Self-use mode

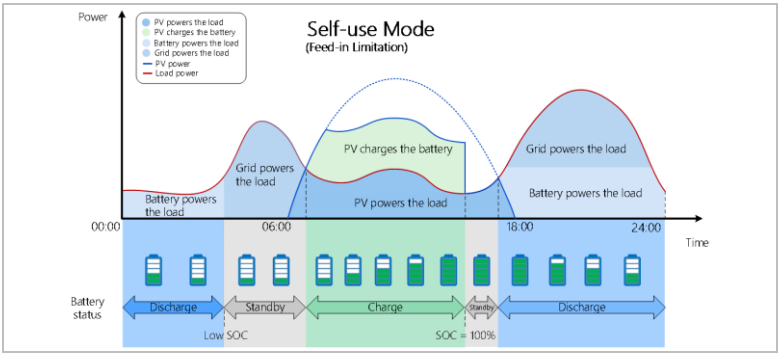

In the event that the local utility restricts the sale of electricity to the grid, the export control value can be set on the inverter.

Figure 7-2: Self-use mode (Feed-in limitation)

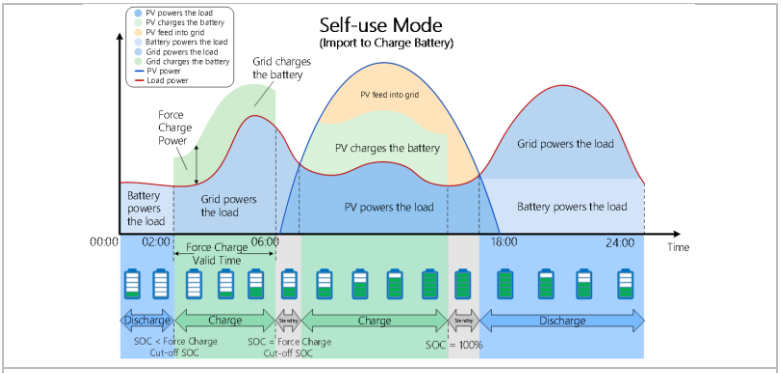

In the self-use mode, it is also possible to set whether the inverter charges the battery from the grid.

Figure 7-3: Self-use mode (import to charge battery)

In Self-use mode, the inverter will automatically charge and discharge the battery according to the following rules:

Setting method 1: Battery First: Disabled; **Charging From Grid**: Disabled

Priority of power supply: PV, battery, grid. Priority of power consumption: loads, battery, grid.

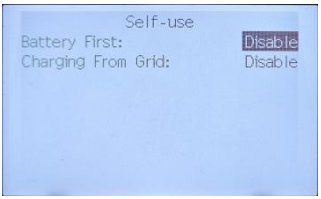	**Set Self-use mode 1**
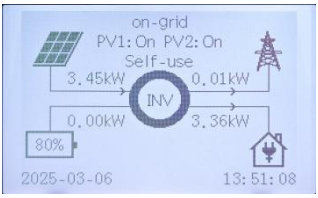	If PV generation equals the load consumption (ΔP < 100 W), the inverter will not charge or discharge the battery.
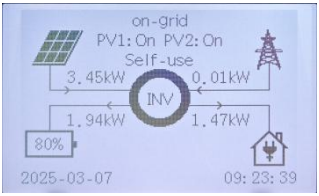	If PV generation is larger than the load consumption, the surplus power is stored in the battery.
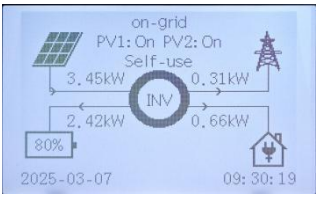	If the battery is full or at maximum charging power, the excess power will be exported to the grid.

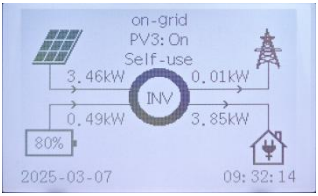	If PV generation is less than the load consumption, it will discharge the battery to supply power to the load.
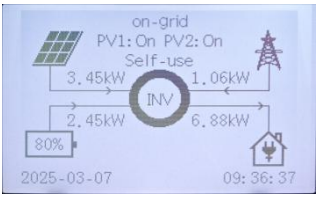	If PV generation plus battery discharge power is less than the load, the inverter will import power from the grid.

- If you are not allowed to export power to the grid, an energy meter and/or CT needs to be installed and the "feed-in limitation" function needs to be enabled.

Setting method 2: Battery First: Enabled; **Battery First Cut-off SOC:** 90%; **Charging From Grid**: Disabled.

Priority of power supply: PV, battery, grid. Priority of power consumption: loads, battery, grid.

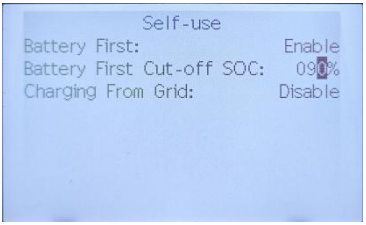	**Set Self-use mode 2**
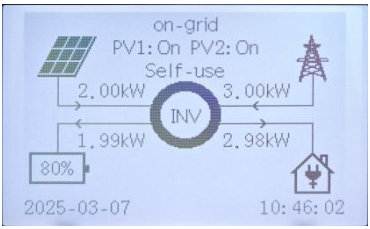	If the PV power is less than or equal to the battery charging power and the battery SOC is less than 90%, the inverter prioritizes charging the battery and the grid supplies power to the household loads.

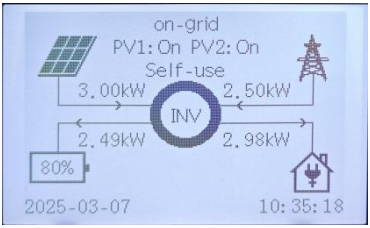	If PV generation exceeds the battery charging power and the battery SOC is below 90%, the inverter prioritizes battery charging. The excess PV power, in conjunction with the grid, supplies the household loads.
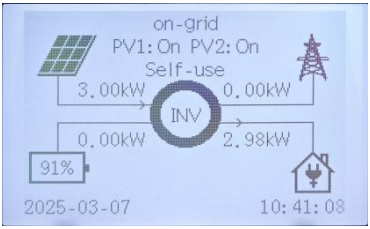	If the batteries continue to charge and the battery SOC reaches 90%, the inverter stops charging the batteries and all of the energy generated by the PV power is supplied to the household loads.

Setting method 3: Bat Priority Control: Disabled; **Import to Charge Battery:** Enabled.

When the import battery charging enable is turned on, the user can set the specific charging time range, the maximum battery charging power and the maximum cut-off SOC for forced charging through the LCD.

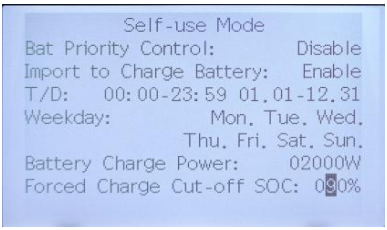	**Setting method 3**
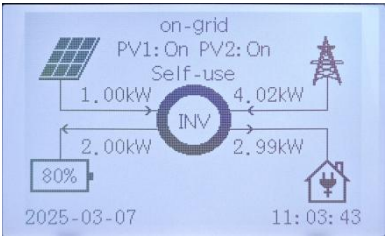	If the PV power is less than the battery charging power and the battery SOC is less than 90%, the inverter gives priority to charging the battery while taking power from the grid to charge the battery and the load power is provided by the grid.

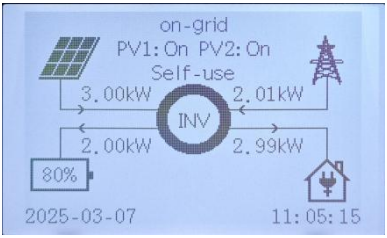	If the PV generation power is greater than the battery charging power and the battery SOC is less than 90%, the inverter prioritizes charging the batteries and the remaining energy generated by the PV power is used with the grid to power the household loads.
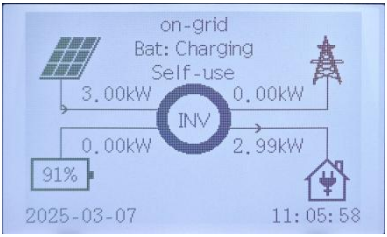	If the batteries continue to charge and the battery SOC reaches 90%, the inverter stops charging the batteries and all of the energy generated by the PV power is supplied to the household loads.

Setting method 4: Battery First: Enabled; **Charging From Grid:** Enabled.

In this mode, the Battery First and Battery First Cut-off SOC functions are active at the same time (see Setting method 2 and 3 for details).

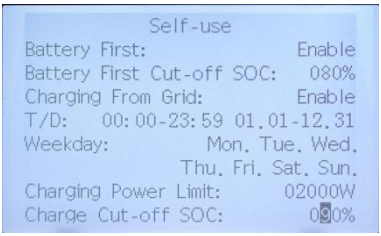	**Setting method 4**

7.3.2 Feed-in Priority mode

The feed-in priority mode is suitable for areas with high feed-in subsidies, but has feed in power limitation. The power generated from PV is directed towards supplying the loads. Any excess power beyond the load requirements will be fed into the grid. If the amount of electricity sold to the grid reaches the set limit threshold, the remaining power will be used to charge the battery.

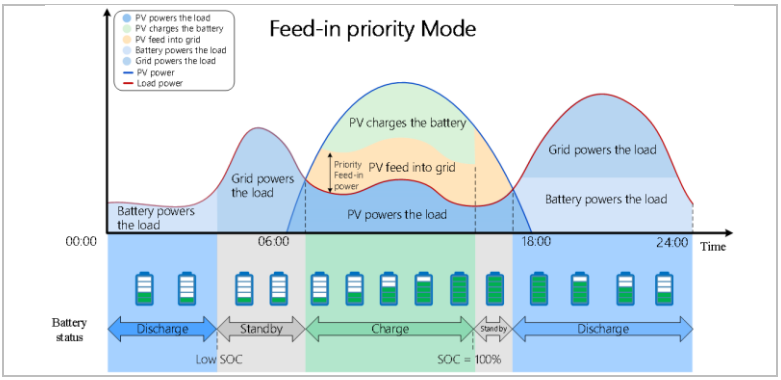

Figure 7-4: Feed-in Priority mode

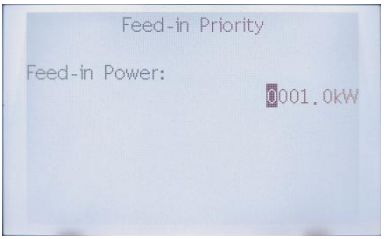	**Feed-in Priority mode**
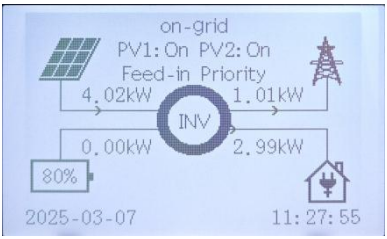	When the PV power minus the load consumption power is less than or equal to the feed power (for example, 1 kW), the excess energy generated by the PV power generation is delivered to the grid.
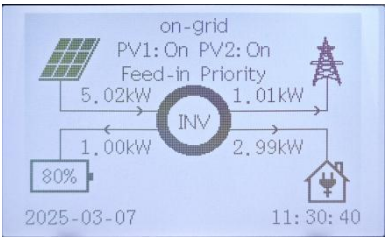	When the PV power minus the load consumption power is greater than the feed power (for example, 1 kW), the extra energy will be used to charge the battery.

7.3.3 Peak Shaving mode

Peak shaving mode is set for leveling out peaks in electricity use. The system is intelligently controlled to ensure charging takes place during off-peak hours and discharging occurs during peak hours.

The power of PV will supply the loads first. when PV is insufficient, it prioritizes purchasing electricity from the grid. When the grid purchases electricity beyond the set threshold, the battery discharges. If the battery discharge is still insufficient, it continues to purchase electricity from the grid.

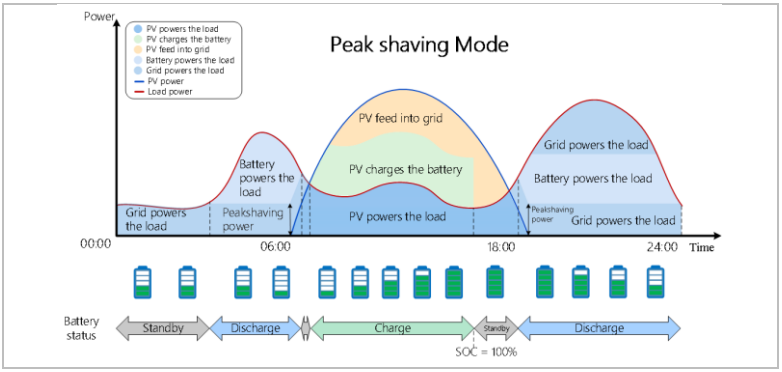

Figure 7-5: Peak shaving mode

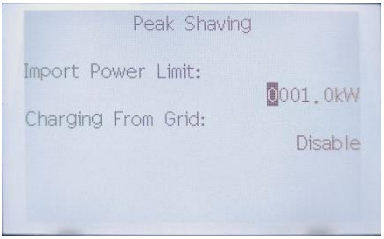	**Charging From Grid: Disable**

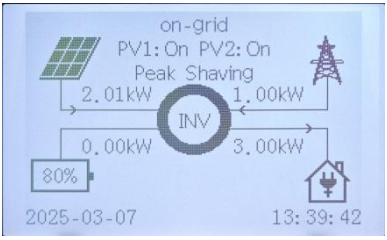	When the PV power is not enough to supply load consumption, the grid starts to supply power to the load and the maximum power taken from the grid does not exceed the priority import power.
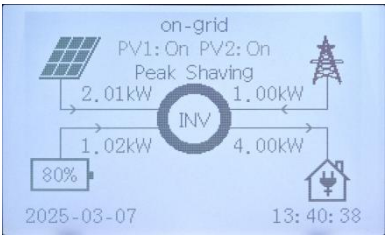	When the PV power and priority import power are also insufficient for supplying load consumption, the battery starts discharging to supply load consumption at the same time.
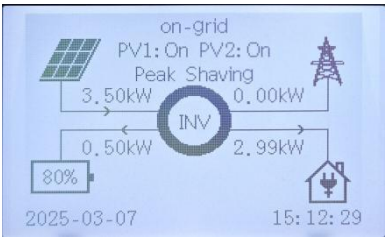	When photovoltaic power generation is greater than the load consumption, the excess energy goes to charge the battery. When the battery SOC is greater than the set value, the excess energy flows to the power grid.
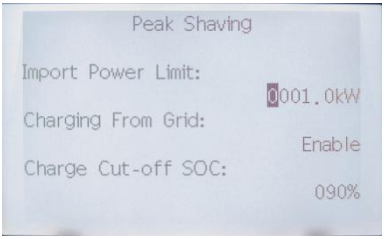	**Charging From Grid: Enable**
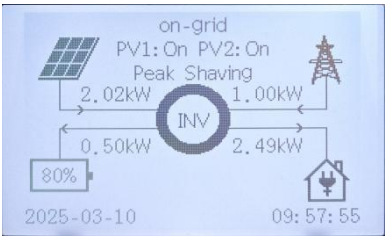	When "Charging From Grid" is enabled, there is not enough PV power to supply the load and the load consumes less than the import power limit, the grid starts to supply power, which is less than the import power limit setting.

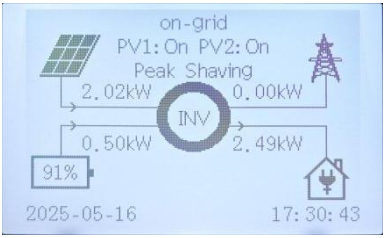

When the battery SOC is greater than the set value, the battery and the PV supply power to the load at the same time.

7.3.4 Time-of-use mode

In Time-of-use mode, different operating modes can be set for various time periods based on actual demand and environmental conditions, including Self-use, Feed-in Priority, Charge, Discharge, and Peak Shaving.

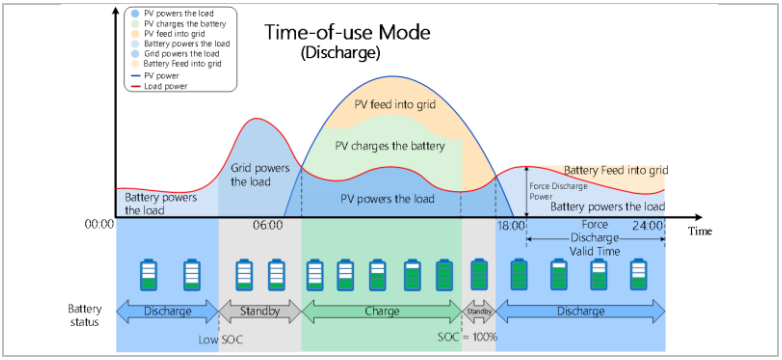

Figure 7-6: Time-of use mode

With Discharge or Charge mode, you can define fixed times of the day to charge or discharge the battery with a certain power level. For details on how to use the other modes, please refer to the corresponding mode descriptions in sections 7.3.1 through7.3.3.

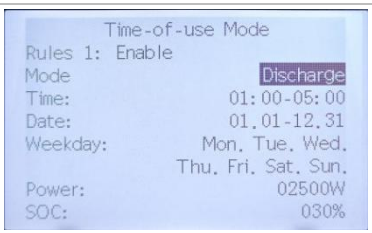

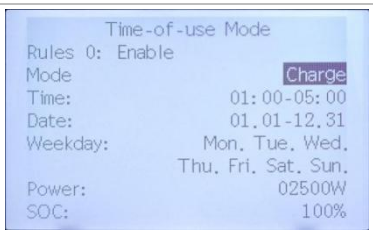

Up to 5 rules (rule 0, 1, 2, 3 and 4) can be set. If more than one rule is valid for any given time, the rule with the lower number is active. Each rule can be enabled or disabled, also charging and discharging period for a rule can be enabled separately.

In the above Discharge/Charge example, Rule 0: the battery will be charged with 2.5 kW between 1 and 5 o'clock at night, and Rule1: discharged with 2.5 kW between 1 and 5 o'clock. In case of conflict between Rule 0 and Rule 1, Rule 0 takes precedence.

7.3.5 Passive mode

Passive mode is used in systems with external energy management systems. The inverter's operation will be controlled by the external controller using the Modbus RTU protocol. Please contact SOFAR if you need the Modbus protocol definition for this device.

7.3.6 Energy storage settings

In this interface, the user can set four battery charging and discharging states, Charge Limit SOC, On-grid Discharge Limit SOC, Off-grid Discharge Limit SOC, Off-grid Recovery Discharge SOC.

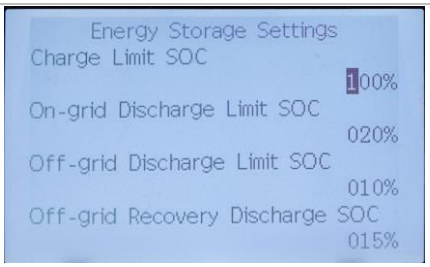

7.4 Feed-in limitation function

The feed-in limitation function is designed to restrict the power fed back into the grid. To enable this function, a power measurement device must be installed in accordance with the specifications of System A or System B detailed in Section 5.4.

You can set this function through LCD:

Main Menu → Advanced Settings → Password 0715 → Feed-in Limit Control

Feed-in limitation: The sum of the feed-in phases must not exceed the set power limitation value. The power of phases drawing power from the grid is disregarded here.

Three Phase Sum Limit: The sum of the feed-in power of all three phases must not exceed the set power limit value. This setting is suitable for balance metering, as is common in Germany, for example.

Hard Limit Control: Australian safety standards. The feed-in power of each single phase should not exceed 33% rated power(eg. for ESI-12K-T1, the feed-in power of each single phase should not exceed 4kW), otherwise the inverter will shut down.

- For the 3-phase limit setting, the current sensors must be correctly assigned to phases L1, L2 and L3 on the electricity meter!
- If communication with the smart meter is interrupted, the inverter limits its output power to the set power limit value.

The figure below shows an operation example.

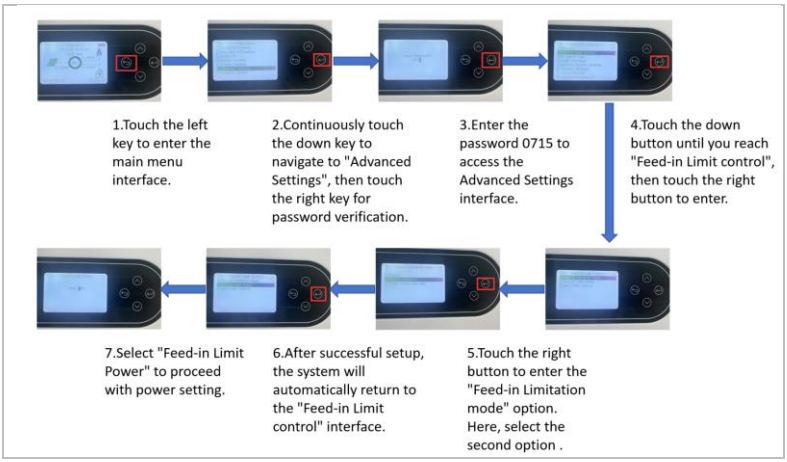

7.5 Menu structure

Press the button to bring up the main menu.

7.5.1 Main menu

System Information
Real-time Information
Event List
Energy Statistics
System Settings
Advanced Settings
Firmware Upgrade

▶ The menu layout may vary according to different firmware versions.

7.5.2 "System Information" menu

1. Inverter	
Inverter (1)	Serial Number, Rated Power, Firmware Version, Grid Code
Inverter (2)	Bat Channel, PV Channel 1, PV Channel 2, PV Channel 3
Inverter (3)	Work Mode, RS485 Address, BACKUP, IV Curve Scan
Inverter (4)	Logic Interface, Power Factor, Feed-in Limit, Insulation Resistance
Inverter (5)	Parallel, Automatic Battery Active, Unbalanced Support
2. Battery	
Battery (1)	Battery Type, Max Charge Current, Max Discharge Current
Battery (2)	Charge Limit SOC, On-grid Discharge Limit SOC, Off-grid Discharge Limit SOC, Off-grid Recovery Discharge SOC
Battery (3)	Serial Number 1 ... n
Battery (4)	Firmware Version 1 ... n

7.5.3 "Real-time Information" menu

1. PV	
1.1 PV (1)	PV1 Voltage, PV1 Current, PV1 Power, PV2 Voltage, PV2 Current, PV2 Power
1.2 PV (2)	PV3 Voltage, PV3 Current, PV3 Power, External PV Power
2. BAT	
2.1 BAT Port Info	Voltage, Current, Power, SOC, State
2.2 BAT real Info	Voltage, Current, Power, SOC, Max Charge Current, Max Discharge Current, Max Cell Temp, Min Cell Temp
3. GRID	Voltage R, Voltage S, Voltage T, Power R, Power S, Power T, Frequency
4. BACKUP	Voltage R, Voltage S, Voltage T, Power R, Power S, Power T, Frequency
5. Normal Load	Power
6. Total Load	Power
7. Wallbox	
7.1 Wallbox (1)	Communication, State, Power, Total Energy, Fault Code
7.2 Wallbox (2)	Voltage R, Voltage S, Voltage T, Current R, Current S, Current T

7.5.4 "Event List" menu

The event list is used to display real-time event recordings, including the total number of events and each specific ID no. and event time. The most recent events are listed at the top.

Event List	
1. Current Event List	Show latest event
2. History Event List	Show event history
Fault information	001 ID04 06150825 (Display of the event sequence number, event ID number and time that the event takes place. Press

	"<Enter>" to toggle between event name and trigger time.)

7.5.5 "Energy Statistics" menu

In this menu, you can view the PV, battery, load and grid energy usage status of different channels in real time and for different years, months and days.

Today	Press the Down button to move between items. Shows PV, Load, Import, Export, Charge, Discharge Energy (kWh) for the selected period.
Month	
Year	
Lifetime	

7.5.6 "System Settings" menu

In this menu, you can make the basic settings which are needed to operate the device.

1. Language	Sets the display language.
2. Date & Time	Sets the date and time of the inverter.
3. Grid Code	Sets the country and grid code.
4. Device Port Management	Sets the parameters for PV port, BAT port, GRID port and BACKUP port.
4.1 PV	Set PV port.
4.1.1 PV1	Set PV input: Select "PV" for photovoltaic scenarios, otherwise set to disabled.
4.1.2 PV2	
4.1.3 PV3	
4.2 BAT	Set battery port: Select "BTS 5K" for battery operation scenarios, otherwise set to disabled.
4.3 GRID	Set grid port mode to grid connection or generator connection.
4.3.1 GRID	Set grid port mode to grid-connected.
4.3.2 GEN	Set grid port mode to generator.
4.3.2.1 Manual	Set the generator to manual mode, then configure its rated power.
4.3.2.1 Auto	Set generator to auto mode with start/stop SOC and rated power.

4.4 BACKUP	Enable/disable off-grid mode. It is only available if a battery is connected.
5. Work Mode	Sets Work mode and the energy storage setting.
5.1 Work Mode	Select between Self-use (standard), Feed-in Priority, Peak Shaving, Time-of-use and Passive. See "7.3 Work Modes" chapter for details.
5.2 Energy Storage Settings	Sets Charge Cut-off SOC, On-grid Discharge Cut-off SOC, Off-grid Discharge Cut-off SOC, Off-grid Discharge Recovery SOC.
6. RS485 Communication	Enter the Modbus address (if several inverters require simultaneous monitoring), default: 01 Baud Rate: The default baud rate is 9,600
7. Wallbox	Setting up the different operating modes of the wall box.
7.1 Charge Now	Sets Wall Box Control, Charging Current, Charging From Battery.
7.2 Scheduled	Sets different rules, Charing Start Time, Charing End Time, Charging Current, Charging From Battery.
7.3 ECO Mode	Sets Charging From Battery.

7.5.7 "Advanced Settings" menu

Password

▶ Several settings require a password to be entered (the default password is 0715/0001).

In this menu, you can make advanced settings.

1. Battery	
1.1 30 Days SOC Calibration	Enable/Disable. When the BTS-5K battery is connected, if "SOC Calibration" is enabled, the inverter will forcibly charge until it is fully charged once a month.
1.2 Battery Active	Sets Auto Active Control and Force Active (only available for BTS battery type).
1.2.1 Auto Active	Enable/Disable. If automatic activation is enabled, the inverter will activate the battery when the inverter needs to discharge or charge the battery according to the operational mode settings. If automatic activation is disabled, battery activation can be performed once via "Once Manual Active".
1.2.2 Once Manual Active	Select "Once Manual Active" for a one-time battery activation.
2. Feed-in Limit Control	Activates or deactivates the feed-in power function of the inverter and sets the maximum feed-in power. This function must be used together with an external current transformer or the smart meter. Details regarding this can be found in the "Communications interfaces" chapter of this manual.
2.1 Feed-in Limitation Mode	Disable: Do not use this function. Three phase Sum limit: The sum of all phases is regulated (balance metering as is common in Germany). Feed-in Limitation: The power of the feeding-in phases is limited.
2.2 Feed-in Limit Power	Set the power size of the inverter flowing to the grid. When detecting

	current flowing to the grid (reverse current), reduce the output power of the inverter so that the power flowing from the inverter to the grid is always connected in a state lower than the set value so as to realise the anti-reverse current and not to send the excess power to the grid.
2.3 Hard Limit Control	This feature is required by Australian safety standards.
3. IV Curve Scan	(Only set with PV channel.) Cyclical scanning of the IV curve in order to find the global point of the maximum output. Advisable in the case of shaded solar generators.
3.1 Scan Control	Enable/disable IV curve scan function.
3.2 Scan Period	Set scan period in minutes.
3.3 Once Manual Scan	Manually start IV curve scanning.
4. Logic Interface	Activates or deactivates logical interfaces. Details regarding this can be found in the "Communications interfaces" chapter of this manual.
4.1 DRM0	Enable/disable DRM0 mode
4.2 DRMn	Enable/disable DRMn mode
5. Restore Factory Settings	Resets stored data in the inverter.
5.1 Clear energy Data	Clears total power production.
5.2 Clear Events	Clears historical events.
5.3 Reset Settings	Restore parameters to factory default settings.
6. Parallel setting	Defines configuration for parallel inverter operation (master/slave).
6.1 Parallel Control	For inverters connected to each other with a Link port, you set Parallel Control to "Enable".
6.2 Master-Slave	One inverter needs to be set as master, all other inverters need to be set to slave.
6.3 Parallel Address	Set each inverter with an individual parallel address (this is an independent number from Modbus ID).
7. Switch On/Off	The inverter can be switched on, switched off, set to standby or set to

	normal operating mode, which can be useful for installation or maintenance work.
8. Unbalanced Support	Default setting: disabled. For situations where the customer only wants to support local loads or has a zero-export limit across all three phases. When used in conjunction with the supplied three-phase energy meter and with this option set to "Enable", the per-phase output current of the inverter will respond independently. Important: For this function to operate properly, the phase on the energy meter must correlate to the corresponding phase when it is wired to the inverter.
9. PCC Import Limit	PCC Import Limit Control: Control whether the PCC power control function is enabled. PCC Import Limit Power: Power upper limit, that is, the maximum power that can be purchased from the PCC (when the load is greater than the maximum power purchased from the PCC, the load power priority is higher to meet the load power priority).
10. Set PCC Power Offset	Calibration for PCC power calculation.
11. BACKUP GFCI	Activates RCD type B monitoring in off-grid mode (300 mA).
12. Neutral Point Grounding	When using off-grid mode, ensure that neutral ground (earth) is enabled. For Australia, South Africa and New Zealand, neutral ground is turned off by default (refer to 5.3 system electrical topology).
13. E-STOP	Enable/disable Emergency Power Off function.
14. SG Ready	**Timed Mode**: Set the start time and stop time, turn on the smart load within the start time range and turn off the smart load outside the start time range. **Smart Mode**: Set the start time and stop time in the start time range, generating power – load power > 500

	W (hysteresis loop parameter reservation can be set) after 5 minutes to turn on the intelligent load; load power – generating power > 500 W after 1 minute to turn off the intelligent load.
15. ATS/12V Control	(The inverter cannot be set for the slave machine.) More details please refer to 0.
15.1 Disable	Disable ATS/12V Control function.
15.2 Off-grid: 12V Turn On	In off-grid mode, the dry contact interface will output a 12 V signal; otherwise, the output is disabled.
15.3 Off-grid: 12V Turn Off	In off-grid mode, the output is disabled; otherwise, the dry contact interface will output a 12 V signal.
16. PCC Meter/CT	Enable/disable PCC Meter/CT function.
17. Bluetooth Settings	Configure the Bluetooth pairing password for near-field connected inverters. The initial default password is 071500.
17.1 Password Settings	Set or change the Bluetooth pairing password.
17.2 Reset Password	Reset the Bluetooth pairing password to default (071500).

- The inverter has built-in relays to control the short circuit of the load N line to earth when off grid.
- When the inverter is off grid and the load N line and PE line are short-circuited, and if the power grid is restored and the load N line and PE line are still short-circuited, leakage protection will be triggered and an explosion hazard will be avoided.

7.5.8 "Firmware Upgrade" menu

The user can update the software via the USB flash drive. SOFAR will provide the firmware upgrade when it is required.

- If you want to do a firmware upgrade, please upgrade with PV input or grid status, as the update will fail if only the battery is connected.

1. Insert the USB stick into the computer.
2. SOFAR will send the firmware upgrade to the user.
3. Unzip the file and copy the original file to a USB stick. Attention: The firmware upgrade file must be in the "firmware" subfolder!
4. Press "Back" on the main interface to enter the main menu page and select "2. Advanced Settings – Switch On/Off – Switch Off". Make sure the inverter shuts down safely.
5. Insert the USB flash drive into the USB interface of the inverter.
6. Go to menu item "7. Firmware Upgrade" in the LCD display.
7. Enter the password (the default password is 0715) and then select "Firmware Upgrade".
8. Enter the password (the default password is 0715) and then select "Inverter" or "Battery".
9. The system will then sequentially update all parts. Pay attention to the displays.
10. If an error message appears, please upgrade again. If this continues repeatedly, contact technical support for help.
11. When the update is complete, go to the menu item "Advanced Settings – Switch On/Off – Switch On" to cause the inverter start up and run.
12. You can check the current firmware version in item "Inverter (1)" of the "System Information" menu.

8 Fault handling

8.1 Troubleshooting

This section contains information and procedures pertaining to the remedying of potential problems with the inverter.

To carry out troubleshooting, proceed as follows:

- Check the warnings, error messages or error codes displayed on the screen of the inverter.
- If no error information is displayed on the screen, check whether the following requirements have been fulfilled:
- Has the inverter been set up in a clean, dry and well-ventilated area?
- Is the DC switch set to ON?
- Are the cables sufficiently dimensioned and short enough?
- Are the input connections, output connections and wiring all in good condition?
- Are the configuration settings for the relevant installation correct?
- Are the display field and communication cables correctly connected and undamaged?

Follow the steps below to view recorded problems: Press "Back" to enter the main menu in the normal interface. In the interface screen, select "Event List", then press "OK" to enter events.

8.1.1 Shutdown procedure

If the inverter needs to be shut down for electrical inspection, please follow the following steps:

1. Press "Back" in the main interface to enter the main menu page and select Advanced Settings – Switch On/Off – Switch Off. Make sure the inverter shuts down safely.
2. Disconnect the AC circuit breaker connecting the inverter power grid port to the power grid.
3. Disconnect the AC breaker connecting the inverter load port to the emergency load.

4. Switch the DC switch on PV side of the product to OFF.
5. Press the battery switch button to turn off the battery output, switch the DC switch on the battery side of the product to OFF.
6. Wait for 15 minutes before checking the inverter.

- After shutting down the inverter via the menu settings, wait for it to be re-energized, then select "Advanced Settings – Switch On/Off – Switch On", and the inverter will start running.

8.1.2 Earth fault alarm

This inverter is compliant with IEC 62109-2 Clause 13.9 and AS/NZS 5033 for earth fault protection.

If an earth fault alarm occurs, the fault is displayed on the LCD screen, the red light illuminates and the fault can be found in the fault history log.

When the inverter is connected to the battery system when the battery system has earth fault/leak alarm in accordance with AS/NZS 5139, the inverter will also signal an alarm. The alarm method is the same as above.

- In the case of devices equipped with a stick logger, the alarm information can be viewed in the monitoring portal and retrieved via the smartphone app.

8.2 Fault list

8.2.1 Inverter fault list

ID	Code name	Description	Solution
001	GridOVP	The voltage of the power grid is too high	If the alarm occurs occasionally, the possible cause is that the electric grid is abnormal occasionally. Inverter will automatically return to normal operating status when the electric grid is back to normal. If the alarm occurs frequently, check whether the grid voltage/frequency is within the acceptable range. If so, please check the AC circuit breaker and AC wiring of the inverter. If the grid voltage/frequency is NOT within the acceptable range and AC wiring is correct, but the alarm occurs repeatedly, contact technical support to change the grid overvoltage, undervoltage, over-frequency and under-frequency protection points after obtaining approval from the local electrical grid operator.
002	GridUVP	The voltage of the mains is too low	
003	GridOFP	The mains frequency is too high	
004	GridUFP	The mains frequency is too low	
005	GFCI	Charge leakage fault	Check inverter and wiring.
008	IslandFault	Island protection fault	If the alarm occurs occasionally, the possible cause is that the electric grid is abnormal occasionally. Inverter will automatically return to
009-010	GridOVPInstant1/2	Transient overvoltage of mains voltage 1/2	

ID	Code name	Description	Solution
011	VGridLineFault	Power grid line voltage fault	normal operating status when the electric grid is back to normal. If the alarm occurs frequently, check whether the grid voltage/frequency is within the acceptable range. If so, please check the AC circuit breaker and AC wiring of the inverter. If the grid voltage/frequency is NOT within the acceptable range and AC wiring is correct, but the alarm occurs repeatedly, contact technical support to change the grid overvoltage, undervoltage, over-frequency and under-frequency protection points after obtaining approval from the local electrical grid operator.
012	InvVoltFault	Inverter overvoltage	Internal faults in inverter. Switch inverter OFF, wait for 5 minutes, then switch inverter ON. Check whether the problem is solved. If not, please contact technical support.
013	RefluxFault	Feed-in Limit function is faulty	Internal fault in the inverter. Switch the inverter off, wait 5 minutes and then switch the unit on again. If the fault persists, contact technical support.
032	N-PE fault	Neutral earth fault	Internal fault in the inverter. Switch the inverter off, wait 5 minutes and then switch the unit on again. If the fault persists, contact technical support.
033	SpiCommFault(DC)	SPI communication is faulty (DC)	
034	SpiCommFault(AC)	SPI communication is faulty (AC)	

ID	Code name	Description	Solution
038	InvSoftStartFail	Inverter failed to output	
039	ArcShutdownAlarm	Arc shutdown protection	
041	RelayFail	Relay detection failure	Internal fault in the inverter. Switch the inverter off, wait 5 minutes and then switch the unit on again. If the fault persists, contact technical support.
042	IsoFault	Insulation resistance is too low	Check the insulation resistance between the photovoltaic array and earth. If there is a short circuit, the fault should be remedied in a timely manner.
043	PEConnectFault	Earth fault	Check the PE conductor for proper functioning.
044	InputConfigError	Incorrect input mode configuration	Check the input mode (parallel/independent mode) settings for the inverter. If not correct, change the input mode.
045	CTDisconnect	CT fault	Check that the wiring of the current transformer is correct.
046	ReversalConnect	The PV is connected in reverse	Check whether the PV wiring is correct.
047	ParallelFault	Master does not exist or is duplicate	Check the parallel mode settings for the inverter. Check whether the wiring is correct.

ID	Code name	Description	Solution
049	TempErrBat	Battery temperature error	For inner BMS battery, make sure that the battery NTC cable is properly connected. Make sure the inverter is installed in an area without direct sunlight. Please ensure that the inverter is installed in a cool/well-ventilated place. Ensure the inverter is installed vertically and the ambient temperature is below the inverter temperature limit.
050-055	TempErrHeatSink1-6	Temperature error, heat sink 1–6	For AC inverter, make sure that the inverter NTC cable is properly connected. Make sure the inverter is installed in an area without direct sunlight or other heat sources. Please ensure that the inverter is installed in a cool/well-ventilated place. Ensure the inverter is installed vertically and the ambient temperature is below the inverter temperature limit.
057-058	TempErrEnv1/2	Temperature error, ambient temperature 1/2	
059-061	TempErrInv1-3	Module 1–3 temperature protection	
065	BusRmsUnbalance	Asymmetrical bus voltage, RMS	Internal fault in the inverter. Switch the inverter off, wait 5 minutes and then switch the unit on again. If the fault persists, contact technical support.
066	BusInstUnbalance	The transient value of the bus voltage is unbalanced	
067	BusUVP	The DC bus voltage is too low during mains connection	
068	BusZVP	The DC bus voltage is too low	

ID	Code name	Description	Solution
069	PVOVP	The PV input voltage is too high	Check whether the PV series voltage (Voc) is higher than the maximum input voltage of the inverter. If this is the case, adjust the number of PV modules in series. After the correction, the inverter automatically returns to its normal state.
070	BatOVP	Battery overvoltage	Check whether the voltage of the battery is higher than the maximum input voltage of the inverter. If this is the case, adjust the number of battery modules in series.
071	LLCBusOVP	LLC bus overvoltage protection	Internal fault in the inverter. Switch the inverter off, wait 5 minutes and then switch the unit on again. If the fault persists, contact technical support.
072	SwBusRmsOVP	Inverter bus voltage RMS software overvoltage	
073	SwBusIOVP	Inverter bus voltage instantaneous software overvoltage	
081	SwBatOCP	Software overcurrent protection of the battery	
082	DciOCP	Dci overcurrent protection	
083	SwIOCP	Instantaneous output current protection	
085	SwAcRmsOCP	Output RMS current protection	
086	SwPvOCPInstant	PV overcurrent software protection	

ID	Code name	Description	Solution
087	IpvUnbalance	PV flows with uneven parallelism	Internal fault in the inverter. Switch the inverter off, wait 5 minutes and then switch the unit on again. If the fault persists, contact technical support.
088	IacUnbalance	Unbalanced output current	
089	SwPvOCP	PV software overcurrent protection	
090	IbalanceOCP	Balanced current protection	
096	EPSLoadShortCircuit	Emergency Power Supply Load Short Circuit	
098	HwBusOVP	Inverter bus hardware overvoltage	
100	HwBatOCP	Battery hardware overflow	
102	HwPVOCP	PV hardware overflows	
103	HwACOCP	Mains current is too high and has triggered hardware protection	
105	MeterCommFault	Communication fault with meter unit	Check whether the meter is connected correctly.
110-112	Overload1-3	Overload protection 1–3	Check whether the inverter is operating under overload.
113	OverTempDerating	The inverter has throttled due to excessive temperature	Make sure that the inverter has been installed in a cool and well-ventilated place without direct sunlight. Make sure the inverter is installed vertically and the ambient temperature is below the temperature limit of the inverter.

ID	Code name	Description	Solution
114	FreqDerating	AC frequency is too high	Make sure that the mains frequency and voltage are within the permissible range.
124	BatDchgProhibit	The battery is low	Please check if the battery SOC of the inverter is too low.
125	BatLowVoltShut	No battery protection	Please check if the battery voltage of the inverter is too low.
128	BatReversalConnect	The battery is connected in reverse	Check whether the battery wiring is correct.
129	PermHwAcOCP	Mains current is too high and has caused an unrecoverable hardware fault	Internal fault in the inverter. Switch the inverter off, wait 5 minutes and then switch the unit on again. If the fault persists, contact technical support.
145	USBFault	Device cannot read data from USB stick. The USB stick has been damaged or the format of the USB stick is not compatible with the device.	Switch the inverter off, wait 5 minutes and then switch the unit on again. If the fault persists, contact technical support.
147	BluetoothFault	The device's Bluetooth communication has failed	Switch the inverter off, wait 5 minutes and then switch the unit on again. If the fault persists, contact technical support.
151	BatPartOffline	A portion of battery communication is lost	Switch the inverter off, wait 5 minutes and then switch the unit on again. If the fault persists, check the communication line or the connection of the battery and the inverter for faults.

ID	Code name	Description	Solution
152	SafetyVerFault	The safety version is inconsistent with the internal safety version	Check whether safety regulations comply with local standards and import correct safety parameters.
153	SCILose(DC)	SCI communication error (DC)	Upgrade software
154	SCILose(AC)	SCI communication error (AC)	Upgrade software
156	SoftVerError	Inconsistent software versions	Download the latest firmware from the website and launch the software update. If the fault persists, contact technical support.
157-158	BMS1-2CommFault	Lithium battery 1–2 communication error	Make sure your battery is compatible with the inverter. CAN communication is recommended. Check the communication line or the connection of the battery and the inverter for faults.
162	RemoteShutdown	Remote shutdown	The inverter is shut down remotely.
165	EmergencyStop	EmergencyStop	The inverter is in an emergency shutdown state.
163	Drms0Shutdown	DRM 0 shutdown	The inverter is running with a Drms0 shutdown.
177	BMS OVP	BMS overvoltage alarm	Internal fault in the connected lithium battery. Switch the inverter and lithium battery off, wait 5 minutes and then switch the components on again. If the fault persists, contact technical support.
178	BMS UVP	BMS undervoltage alarm	
179	BMS OTP	BMS high-temperature warning	
180	BMS UTP	BMS low-temperature warning	

ID	Code name	Description	Solution
181	BMS OCP	BMS overload warning during charging and discharging	
182	BMS Short	BMS short circuit alarm	Please contact technical support.
185	BMS CAN VerLow	Inconsistent software versions	Download the latest firmware from the website and launch the software update. If the fault persists, contact technical support.
186	BatDischargeHTP	BAT high-temperature warning when discharging	Internal fault in the connected lithium battery. Switch the inverter and lithium battery off, wait 5 minutes and then switch the components on again. If the fault persists, contact technical support.
187	BatDischargeLTP	BAT low-temperature warning when discharging	
188	BatChargeHTP	BAT high-temperature warning when charging	
189	AFCICommLose	AFCI communication error	Please ensure proper installation of the AFCI breaker.
190	BatChargeLTP	BAT low-temperature warning when charging	Internal fault in the connected lithium battery. Switch the inverter and lithium battery off, wait 5 minutes and then switch the components on again. If the fault persists, contact technical support.
328	AcStartTimeOut	BAT active failed	Internal fault in active lithium battery. Check the power line and CAN line between inverter and battery and then try again. If the fault persists, please contact technical support.

ID	Code name	Description	Solution
379	AFCICheckError	AFCI chip self-test abnormality	Switch the inverter off, wait 5 minutes and then switch the unit on again. If the fault persists, contact technical support.
401	AFCI0	Arcing detected in AFCI channel	

8.2.2 Battery fault list

ID	Name	Description	Solution
808	HS1HighTempWarning	Radiator 1 high temperature alarm	Check whether the number of batteries is set correctly. If the setting is correct, please contact technical support to upgrade software.
809	EnvHighTempWarning	Ambient high temperature alarm	Please make sure the battery is installed in a cool, well-ventilated place.
813	StopChgWarning	Charging prohibition alarm	If the battery is almost full, no action is required. Otherwise, please contact technical support.
814	StopDchgWarning	Discharging prohibition alarm	If the battery is almost empty, no action is required. Otherwise, please contact technical support.
864	HS1OverTempFault	Over-temperature protection of radiator 1	Power off and wait for 2 hours. If the problem is not solved, please contact technical support.
865	OverTempFault_Env	Over-temperature protection of ambient temperature	
866	SciCommFault	Internal communication failure of battery	If this fault occurs occasionally, wait a few minutes to see whether the problem is resolved. If this fault occurs frequently, please contact technical support.
867	Can1CommFault	Can1 communication failure	If this fault occurs occasionally, wait a few minutes to see whether the problem is resolved. If this fault occurs frequently, please contact technical support.

ID	Name	Description	Solution
872	SwBusInstantOVP	Bus software overvoltage	If this fault occurs occasionally, wait a few minutes to see whether the problem is resolved. If this fault occurs frequently, please contact technical support.
873	SwBusInstantUVP	Bus software undervoltage	
874	SwBatInstantOVP	Battery software overvoltage	
875	SwBatInstantUVP	Battery software undervoltage	
879	HwOCP	Hardware overcurrent	
880	unrecoverBusAvgOV	Permanent bus overvoltage	Restart the battery and wait several minutes. If the problem is not resolved, please contact technical support.
883	unrecoverHwOCP	Permanent hardware overcurrent	
893	unrecoverBusSCP	Permanent short-circuit protection	Restart the battery and wait several minutes. If the problem is not resolved, please contact technical support.
894	unrecoverBatActFail	Permanent battery activation failed	
895	unrecoverBusRPP	Permanent bus reverse connection	Check whether the wiring is correct and restart the battery. If the problem is not resolved, please contact technical support.
899	BMSOVOCP	BMS overvoltage and overcurrent fault	If this fault occurs occasionally, wait a few minutes to see whether the problem is resolved. If this fault occurs frequently, please contact technical support.
900	SwBatAvgOCP	Battery average overcurrent protection	
901	SwAvgOverloadP	Average overload protection	
902	SwBusInstantOCP	Bus software overcurrent	

ID	Name	Description	Solution
903	SwCBCOCP	Software CBC overcurrent protection	
905	StartupBusSCP	Startup short-circuit protection	Restart the battery and wait several minutes. Check whether the power line is short circuited. If the problem is not resolved, please contact technical support.
906	SwBusAvgUVP	Bus average undervoltage	Restart the battery and wait several minutes. If the problem is not resolved, please contact technical support.
907	ChipClockFault	Clock failure of the chip	Restart the battery and wait several minutes. If the problem is not resolved, please contact technical support.
908	PCSCanCommFault	Faulty CAN communication between battery and inverter	Make sure your battery is compatible with the inverter. CAN communication is recommended. Check the communication line or the connection of the battery and the inverter for faults.
909	HeatsinkLowTempFault	Heat sink low-temperature fault	Please make sure that the heat sink temperature is not lower than the temperature limit of the battery.
910	EnyLowTempFault	Low ambient temperature, battery failure	Please make sure that the ambient temperature is not lower than the temperature limit of the battery.
911	ADOffsetCalibrateFault	Sample offset calibration failure	Restart the battery and wait several minutes. If the problem is not resolved, please contact technical support.

8.3 Maintenance

Inverters do not generally require daily or routine maintenance. Before carrying out cleaning, ensure that the DC switch and AC circuit breaker between the inverter and power grid have been switched off. Wait at least 15 minutes before carrying out cleaning.

8.3.1 Cleaning the inverter

Clean the inverter using an air blower and a dry, soft cloth or a soft-bristle brush. Do not clean the inverter with water, corrosive chemicals, cleaning agents etc.

8.3.2 Cleaning the heat sink

In order to help guarantee correct long-term operation of the inverter, make sure that there is sufficient space for ventilation around the heat sink. Check the heat sink for blockages (dust, snow etc.) and remove them if present. Please clean the heat sink using an air blower and a dry, soft cloth or a soft-bristle brush. Do NOT clean the heat sink with water, corrosive chemicals, cleaning agents etc.

9 Data sheet

▶ The following parameters may change without notice, so please refer to the user manual and data sheet on our website.

Model	ESI-5K-T1	ESI-6.5K-T1	ESI-8K-T1	ESI-9.9K-T1-A	ESI-10K-T1	ESI-12K-T1
PV input						
Recommended max. PV power	10 kWp	13 kWp	16 kWp	20 kWp	20 kWp	24 kWp
Max. input voltage	1,000 V DC					
Startup voltage[1]	200 V DC					
Rated input voltage	600 V DC					
MPP voltage range	160–950 V DC					
Number of MPPTs	3					
Max. number of input strings per MPPT	1/1/1					
Max. input current	20/20/20 A					
Backfeed current	0A					
Max. Isc	25/25/25 A					
Battery						
Voltage range	350–435 V DC					
Number of battery input channels	1					
Max. charging power[3]	10 kW					
Max. discharging power	5 kW	6.5 kW	8 kW	9.9 kW	10 kW	10 kW
Max. charging current	25 A					
Max. discharging current	15 A	19.5 A	24 A	29.7 A	30 A	30 A
Battery type[2]	Lithium-ion					
BMS communication	CAN					
AC backup						
Rated output voltage	3N~+PE, 380/400/415 V AC					
Rated output frequency	50/60 Hz					
Rated output power	5 kW	6.5 kW	8 kW	9.9 kW	10 kW	12 kW
Rated output current	7.6/7.2/ 6.9 A	9.9/9.4/ 9.0 A	12.1/11.6/ 11.1 A	15.0/14.3/ 13.8 A	15.2/14.5/ 13.9 A	18.2/17.4/ 16.7 A
Rated apparent power	5 kVA	6.5 kVA	8 kVA	9.9 kVA	10 kVA	12 kVA
Max. apparent power	5.5 kVA	7.15 kVA	8.8 kVA	9.9 kVA	11 kVA	13.2 kVA

Model	ESI-5K-T1	ESI-6.5K-T1	ESI-8K-T1	ESI-9.9K-T1-A	ESI-10K-T1	ESI-12K-T1
Max. output current	8.3/8.0/7.6 A	10.9/10.3/9.9 A	13.3/12.8/12.2 A	15.0/14.3/13.8 A	16.7/15.9/15.3 A	20.0/19.1/18.3 A
Peak output apparent power[3]	2 times rated power, 10 s					
Inrush current	180A, 200ms					
Max. output fault current	32A					
THDv (@ linear load)	< 3%					
Switching time	10 ms default					
Asymmetric load	Yes, supports 100% three-phase unbalanced load					
AC grid						
Rated voltage	3(N)~+PE, 380/400/415 V AC					
Rated frequency	50/60 Hz					
Rated input power	5 kW	6.5 kW	8 kW	9.9 kW	10 kW	10KW
Rated output power	5 kW	6.5 kW	8 kW	9.9 kW	10 kW	12 kW
Rated output current	7.6/7.2/6.9 A	9.9/9.4/9.0 A	12.1/11.6/11.1 A	15.0/14.3/13.8 A	15.2/14.5/13.9 A	18.2/17.4/16.7 A
Rated apparent power	5 kVA	6.5 kVA	8 kVA	9.9 kVA	10 kVA	12 kVA
Max. apparent power	5.5 kVA	7.15 kVA	8.8 kVA	9.9 kVA	11 kVA	13.2 kVA
Max. output current	8.3/8.0/7.6 A	10.9/10.3/9.9 A	13.3/12.8/12.2 A	15.0/14.3/13.8 A	16.7/15.9/15.3 A	20.0/19.1/18.3 A
Max. input current	15.2/14.5/13.9 A	19.8/18.8/18.1 A	24.2/23.2/22.2 A	30.3/29.0/27.8 A	30.3/29.0/27.8 A	33.3/31.9/30.6 A
Inrush current	180A, 200ms					
Max. output fault current	32A					
THDi	< 3%					
Power factor range	0.8 lagging to 0.8 leading					
Efficiency						
Max. MPPT efficiency	99.9%					
Max. efficiency	98.0%	98.0%	98.0%	98.2%	98.2%	98.2%
European efficiency	97.0%	97.0%	97.0%	97.5%	97.5%	97.5%
Max. efficiency of charging/discharging[4]	97.6%	97.6%	97.6%	97.8%	97.8%	97.8%
Protection						
DC switch	Yes					
PV reverse connection protection	Yes					
Battery reverse connection protection	Yes					

Model	ESI-5K-T1	ESI-6.5K-T1	ESI-8K-T1	ESI-9.9K-T1-A	ESI-10K-T1	ESI-12K-T1
Output short-circuit protection	Yes					
Output overcurrent protection	Yes					
Output overvoltage protection	Yes					
Insulation impedance detection	Yes					
Residual current detection	Yes					
Anti-island protection	Yes					
Surge protection[5]	PV: type II, AC: type II					
General parameters						
Inverter topology	Non-isolation					
Protection class	Class I					
IP rating	IP66					
Overvoltage category	AC III, DC II					
Operating temperature range	–30 °C to +60 °C (derating above +45 °C)					
Relative humidity range	5% to 95%					
Max. operating altitude	4,000 m (derating above 2,000 m)					
Standby self-consumption[6]	< 10 W					
Installation method	Wall mounted					
Dimensions (W x H x D)	708 x 440 x 170 mm					
Cooling mode	Natural					
Weight	30 kg					
Communication	RS485, optional: Wi-Fi/4G/LAN					
Display	LCD & app					

[1] Minimum PV voltage to start MPPT operation.
[2] Please refer to document "SOFAR inverter model compatible battery list".
[3] Full battery and sun.
[4] Battery AC maximum efficiency of battery charge and discharge.
[5] According to EN/IEC 61643-11.
[6] Standby loss at rated input voltage.

Version 1.0

ENERGY TO POWER YOUR LIFE

ADDRESS

11th Floor, Gaoxingqi Technology Building,
District 67, Xingdong Community, Xin'an Street,
Bao'an District, Shenzhen, China

EMAIL

info@sofarsolar.com

WEBSITE

www.sofarsolar.com

SOFARSOLAR